Regular Meeting of the Village of Somerset Board of Trustees
Village Hall, 110 Spring Street Somerset, WI 54025 | Tuesday, June 18, 2024

Village President, Mike Kappers called the Regular meeting to order at 6:00 p.m. Present were Mike Kappers, Caleb Garn, Chris Moreno, Ryan Sicard, Donnie Kern, and Chris Dubak at the Village Hall. Brandon Krohn was present via Zoom. Also present at Village Hall – Village Attorney, Paul Mahler and Director of Public Works, Bob Gunther. Building Inspector, Tony Feuerhelm, was also present via Zoom.

Public Comment

- None

Approval of Agenda

Motion by Kern, second by Moreno to approve the agenda with amendment to move item #6 to item #5 and motion carried.

Positive Recognition

The board recognized Dave Bracht, Travis Belisle, Denise Gauper and John Gauper for their work on Pea Soup Days 2024.

Presentation

Max Franklin from Placer Ai presented information about their services.

Consent Agenda

- *Motion by Kern, second by Moreno to approve the Consent Agenda including the following:*
    - *Minutes of May 21, 2024*
    - *Village, Water and Sewer Bills*
    - *Public Safety Committee meeting dates changed to July 1, 2024 and August 5, 2024, if needed*
    - *Wastewater Treatment Facilities Improvements Change Order #7*
    - *Retaining Wall Repair – Main Street, Spring Street and Depot Street*
    - *Table Skirt Purchase – up to $100.00*
    - *Fire/Rescue Report*

New Business

- **Discussion/Possible Approval – Placer Ai Proposal**
    - *Motion by Sicard, second by Moreno to approve Placer Ai Proposal. Motion carried 6-1.*
    - *Kern asked which budget will cover this expense – Economic Development*
    - *Sicard suggested Gunther create a policy regarding access to software*
- **Discussion – CORP Survey**
    - Final draft, once approved, will be posted on website
    - Gunther suggested priority listing work through Public Works committee, then the board
    - Move back to Public Works for more work – not time sensitive
    - Does not need to be included in needs assessment/impact fees
- **Discussion/Possible Approval – Model Ordinance – Utility Easements**

    - Kern stated this came from Public Works because of utility work by NW Communications and includes model ordinance and permit application
    - *Motion by Kern, second by Garn to adopt ordinance language and ROW permit with modification of change to $1,000,000 and motion carried unanimously.*
- **Discussion/Possible Approval – Resolution 2024-02: Hazard Mitigation Plan**
    - *Motion by Kappers, second by Garn to approve Resolution 2024-02: Hazard Mitigation Plan and motion carried unanimously.*
- **Discussion/Possible Approval – Resolution 2024-03: Compliance Maintenance Annual Report**
    - *Motion by Kappers, second by Dubak to approve Resolution 2024-03: Compliance Maintenance Annual Report and motion carried unanimously.*
- **Discussion/Possible Approval – July Committee Meetings**
    - No action was taken
    - Meetings will occur as scheduled, if needed
- **Discussion/Possible Approval – Resolution 2024-04: July Meeting Date**
    - *Motion by Sicard, second by Garn to approve Resolution 2024-04: July Meeting Date and motion carried unanimously. July Village Board meeting will be held on July 15, 2024.*
- **Discussion/Possible Approval – Ordinance 13-1-23 – General Site Standards, Plan for Action**
    - Tony state Capstone informed him landscaping cannot be completed yet due to how saturated the ground is due to rain
    - Krohn suggested giving some leeway by next board meeting and consider updating language to reflect later date than May 1
    - *Motion by Sicard, second by Garn to direct the developer they have until July 15 to complete landscaping and to review ordinance. Motion carried unanimously.*
- **Discussion/Possible Approval – Class "B" Beer License Application – Edgy Eats; Beer Garden Permit – Edgy Eats; and Agent Appointment – Alisa Kaufman**
    - *Motion by Sicard, second by Moreno to approve and motion carried unanimously.*
- **Discussion/Possible Approval – Village Seal and Flags on Wall**
    - Table to July
- **Discussion/Possible Approval – Election of President Pro Tem**
    - *Motion by Krohn to nominate Sicard as President Pro Tem, second by Garn*
    - Kern asked why there needs to be a change
    - *Roll call vote – Moreno, Garn, Krohn, Sicard – aye; Kern, Dubak, Kappers – nay. Motion carried 4-3.*
- **Discussion/Possible Approval – Board, Committee and Commission Application**
    - *Motion by Kern, second by Garn to approve Board, Committee and Commission Application and motion carried unanimously.*

<u>Unfinished Business</u>

- **Discussion/Possible Approval – Ordinance Amendment Title 2 – Government and Administration – Chapters 1-5**
    - Kern as concerns – has legal counsel reviewed?
    - Mahler stated some changes are OK, some are not
    - *Motion by Kern, second by Kappers to table until next election. Garn asked for a date. Kern amended his motion to table until December 2024. Motion carried 5-2.*

- **Discussion/Possible Approval – General Sam's Beer Garden Application**
    - *Motion by Kern, second by Garn to approve the General Sam's Beer Garden Application and motion carried unanimously.*
    - Kappers state PD recommends updating application prior to application period.
- **Discussion/Possible Approval – Committee Appointments**
    - Weed Commissioner – Mark Moser
        - *Motion by Kern, second by Dubak and motion carried unanimously.*
    - Plan Commission – Dan Vanasse and Jessica Plourde
        - *Motion by Sicard, second by Moreno and motion carried 6-1.*
        - Krohn would like to see Cathy Ness on Plan Commission
    - Board of Zoning Appeals – Shawn Weisen, Michelle Beauvais, Dan Vanasse, Dave Wolner, and Laine Belter
        - Mahler recommends checking Weisen settlement agreement before making appointment
        - *Motion by Sicard, second by Dubak to approve Beauvais, Vanasse, Wolner, and Belter and motion carried 6-1.*
        - *Motion by Kern, second by Garn to approve Tabatha Kwak and Brenda Forrest as alternates and motion carried unanimously.*
    - Economic Development Committee
        - *Motion by Dubak, second by Krohn to approve as presented and motion carried 6-0 (Sicard – abstain)*
            - Mike Kappers, Chris Dubak, Chris Fergason, Dave Bracht, Jim Boo, Rick Lundell, and Ken Lehman. Alternate – Jessica Plourde.
    - Police Review Board
        - *Motion by Kern, second by Garn to approve Brenda Forrest replacing Michelle Beauvais and motion carried unanimously.*
    - Housing Program Committee
        - Laine Belter, Michelle Beauvais, Dan Vanasse, and Cathy Ness
        - *Motion by Kern, second by Dubak to approve Belter, Beauvais, Vanasse, and Ness and motion carried unanimously.*
    - St. Croix Bike & Pedestrian Trails Coalition Member
        - Rob Semplinski
        - *Motion by Kappers, second by Krohn to approve Rob Semplinski and motion carried unanimously.*
    - Fire/Rescue Village Reps
        - Mike Kappers, Chris Dubak, and Dave Wolner
        - *Motion by Garn, second by Sicard to approve Kappers, Dubak and Wolner and motion carried unanimously.*
- **Discussion/Possible Approval – Update of Landowner Complaints in River Hills Development from May Meeting**
    - *Motion by Kappers, second by Dubak to bring in third party engineer if residents do not agree to Carlson McCain plan and authorize Gunther to hire third party engineer. Motion carried unanimously.*
    - Keep on future Public Works and Village Board agendas until resolved.

<u>Closed Session</u>

- *Motion by Kappers, second by Sicard to convene to closed session pursuant to Wis. Stats. 19.85(1)(e) Deliberating or negotiating the purchase of public properties, the investing of public funds or conducting other specified public business, whenever competitive or bargaining reasons require a closed session-Capital Investments Group and pursuant to Wis. Stats. 19.85(1)(f) Considering financial, medical, social or personal histories of or disciplinary data of specific persons, preliminary consideration of specific personnel problems or the investigation of charges likely to have a substantial adverse effect upon the reputation of any person referred to in such histories or data or involved in such problems or investigations-Village Attorney. Roll call vote, motion carried unanimously. Krohn did not stay for closed session.*

Reconvene to Open Session

- *Motion by Kern, second by Moreno to reconvene to open session. Motion carried unanimously.*

Adjourn

- *Motion by Garn, second by Kern to adjourn and motion carried unanimously. Meeting adjourned at 9:01 p.m.*

Tasia Berger, Village Clerk

Special Meeting of the Village of Somerset Board of Trustees
Village Hall, 110 Spring Street Somerset, WI 54025 | Wednesday, June 26, 2024

Village President, Mike Kappers called the Special Meeting to order at 4:00 p.m. Present were Mike Kappers, Caleb Garn, Chris Moreno, Chris Dubak, Ryan Sicard, Brandon Krohn and Donnie Kern (Zoom).

Closed Session

- *Motion by Kappers, second by Sicard to convene into closed session pursuant to WI Stats. 19.85 (1)(e) Deliberating or negotiating the purchasing of public properties, the investing of public funds, or conducting other public business, whenever competitive or bargaining reasons require a closed session – Capital Investments Group. Roll call vote - motion carried unanimously.*

Convene Into Open Session

- *Motion by Krohn, second by Sicard to convene into open session. Motion carried unanimously.*

Adjourn

- *Motion by Krohn, second by Garn to adjourn at 5:14 p.m. Motion carried unanimously.*

Tasia Berger, Village Clerk

Total Bills
$172,197.95

ALL Checks by Payee ACCT

GENERAL CHECKING - FIRST NATL

Dated From: 1/01/2024 From Account:
Thru: 7/17/2024 Thru Account:

Voucher Nbr	Check Date	Payee	Amount
	7/17/2024	BLOMBERG, DYLAN REIMBURSEMENT FOR TRAINING 6/23-6/28	1,250.22
	7/17/2024	CWS SECURITY GEN/QUARTERLY MONITORING	54.00
	7/17/2024	GUARDIAN SUPPLY POL/UNIFORM ALLOWANCE/BADGE	290.97
	7/17/2024	HAWKINS INC. CHEMICALS	3,332.20
	7/17/2024	SOMERSET COLLISION AND COATINGS LLC POL/RUNNING BOARDS/DEK SYSTEM NEW SQUAD	2,371.03
	7/17/2024	SOMERSET UTILITIES WATER/SEWER SERVICES	8,551.34
	7/17/2024	ST CROIX COUNTY TREASURER JUNE COURT	246.80
	7/17/2024	STATE OF WISCONSIN COURT FINES & SURCHARGES JUNE COURT	1,524.41
	7/17/2024	TRANSUNION RISK AND ALTERNATIVE CT/JUNE SERVICES	75.00
Manual Check	7/05/2024	XCEL ENERGY ELECTRIC EXPENSE	66.01
Manual Check	7/08/2024	XCEL ENERGY ELECTRIC EXPENSE	1,269.62
		Grand Total	19,031.60

Dated From: 1/01/2024 From Account:
Thru: 7/17/2024 Thru Account:

	Amount
Total Expenditure from Fund # 100 - VILLAGE GENERAL FUND	11,773.59
Total Expenditure from Fund # 470 - CAPITAL IMPROVEMENTS	2,371.03
Total Expenditure from Fund # 610 - WATER UTILITY FUND	1,384.22
Total Expenditure from Fund # 620 - SEWER UTILITY FUND	3,502.76
Total Expenditure from all Funds	19,031.60

GENERAL CHECKING - FIRST NATL Accounting Checks

Posted From: 6/20/2024 From Account:
Thru: 7/08/2024 Thru Account:

Check Nbr	Check Date	Payee	Amount
62399	7/03/2024	ABT MAILCOM WU/SU/UTILITY BILLING	999.54
62400	7/03/2024	ADVANTAGE POLICE SUPPLY INC POL/SUPER SOCK	345.50
62401	7/03/2024	AG SOURCE COOP SERVICES WU/SU/LAB TESTING	763.50
62402	7/03/2024	BAKER & TAYLOR BOOKS LIB/AUDIO/VIDEO	252.96
62403	7/03/2024	BAKER & TAYLOR BOOKS LIB/BOOKS	735.63
62404	7/03/2024	BAKKE NORMAN SC CT/ATTORNEY SERVICES	228.75
62405	7/03/2024	CAPSTONE HOMES INC REFUND DRIVEWAY DAMAGE DEPOSITS	7,500.00
62406	7/03/2024	CINTAS FLOOR MAT SERVICES	123.95
62407	7/03/2024	COUNTRYSIDE PLUMBING & HEATING SU/SU/A/C MAINTENANCE	125.00
62408	7/03/2024	CWS SECURITY LIB/ANNUAL MONITORING	312.96
62409	7/03/2024	DAREL L. HALL ANIMAL CONTROL SERVICES	208.21
62410	7/03/2024	DEPARTMENT OF ADMINISTRATION TEACH SERVICES-LIBRARY	600.00
62411	7/03/2024	EMERGENCY COMMUNICATION SYSTEMS ANNUAL SIREN MAINTENANCE	965.32
62412	7/03/2024	ENGINEERING UNLIMITED INC PADLOCKS	143.78
62413	7/03/2024	EO JOHNSON COMPANY LIB/COPIER USAGE	237.41
62414	7/03/2024	EO JOHNSON COMPANY GEN/WU/SU/COPIER LEASE	107.10
62415	7/03/2024	GATEWAY BUILDERS/HRHH REFUND DRIVEWAY DEPOSITS	1,500.00
62416	7/03/2024	GEMPLER'S PW/UNIFORM ALLOWANCE/SUPPLIES	444.89
62417	7/03/2024	GEN COMM POL/RADIO FOR NEW SQUAD	1,690.00

GENERAL CHECKING - FIRST NATL Accounting Checks

Posted From: 6/20/2024 From Account:
Thru: 7/08/2024 Thru Account:

Check Nbr	Check Date	Payee	Amount
62418	7/03/2024	GREEN, TOM LIB/DELIVERED MATERIALS 1/10-6/12	18.89
62419	7/03/2024	HUDSON AREA PUBLIC LIBRARY LIB/REPLACEMENT FEE	5.00
62420	7/03/2024	HUDSON HOSPITAL POL/TESTING	55.00
62421	7/03/2024	JOHNSON MOTOR SALES INC. POL/SQUAD MAINTENANCE	658.64
62422	7/03/2024	LOGISTICS RECYCLING INC GEN/SHRED BIN RENTAL	10.00
62423	7/03/2024	MIDWEST NATURAL GAS INC. MAY NATURAL GAS SERVICES	538.55
62424	7/03/2024	NORTHWOOD TECHNICAL COLLEGE - RICE LAKE POL/TRAINING	250.00
62425	7/03/2024	NORTHWOOD TECHNICAL COLLEGE-SUPERIOR POL/TRAINING	300.00
62426	7/03/2024	OLSON SANITATION LLC GEN/VILLAGE HALL CONTAINERS	130.00
62427	7/03/2024	PLACER LABS INC PLATFORM ACCESS 6/19/24-6/18/25	7,000.00
62428	7/03/2024	RASKA SEWER SERVICE PKS/JUNE PORTABLE RENTAL	157.50
62429	7/03/2024	RAY O'HERRON CO INC POL/AMMO	658.00
62430	7/03/2024	RIVISTAS LLC LIB/MAGAZINE ORDER	551.01
62431	7/03/2024	SCHNEIDER, MIKE SUMMER READING PERFORMER 7/11/24	375.00
62432	7/03/2024	SCHULTE, DAVE LIB/SUMMER READING PERFORMANCE	390.00
62433	7/03/2024	SHORT ELLIOTT HENDRICKSON INC TAP GRANT ENGINEERING	2,298.27
62434	7/03/2024	ST CROIX COUNTY HISTORICAL SOCIETY LIB/ANNUAL MEMBERSHIP	30.00
62435	7/03/2024	SUSTAINABLE SAFARI LLC LIB/SUMMER READING PROGRAM	435.00
62436	7/03/2024	UNITED STATES TREASURY FORM 720	17.25

GENERAL CHECKING - FIRST NATL Accounting Checks

Posted From: 6/20/2024 From Account:
Thru: 7/08/2024 Thru Account:

Check Nbr	Check Date	Payee	Amount
62437	7/03/2024	WASTEWATER TRAINING SOLUTIONS SU/BASIC GENERAL WASTEWATER TRAINING	370.00
62438	7/03/2024	WISCONSIN PROFESSIONAL POLICE ASSOC JULY UNION DUES	222.50
62439	7/03/2024	WISCONSIN SUPREME COURT MUNICIPAL COURT CLERK SEMINAR-HEINTZ	40.00
EFT 060324-2	6/03/2024 Manual Check	HEALTH PARTNERS VOID-JUNE HEALTH INSURANCE PREMIUMS	-29,911.13
EFT 060324-2	6/03/2024 Manual Check	HEALTH PARTNERS CORRECTED JUNE HEALTH INSURANCE PREMIUMS	31,194.85
EFT 060524-2	6/05/2024 Manual Check	CARDMEMBER SERVICE MAY CHARGES	3,060.17
EFT 060524-3	6/05/2024 Manual Check	WEX BANK PW/PKS/SU/GASOLINE CHARGES	745.43
EFT 060524-4	6/05/2024 Manual Check	XCEL ENERGY ELECTRIC EXPENSE	64.72
EFT 061024-1	6/10/2024 Manual Check	QUILL CORPORATION GEN/OFFICE SUPPLIES	48.77
EFT 061024-2	6/10/2024 Manual Check	XCEL ENERGY ELECTRIC EXPENSE	1,050.79
EFT 061224-1	6/12/2024 Manual Check	WM CORPORATE SERVICES INC SU/WWTF CONSTRUCTION DUMPSTER	2,642.27
EFT 061424-1	6/14/2024 Manual Check	HSA BANK EMPLOYEE CONTRIBUTIONS	1,316.24
EFT 061724-1	6/17/2024 Manual Check	FEDERAL TAX PYMT FEDERAL TAX DEPOSIT	13,267.35
EFT 061724-2	6/17/2024 Manual Check	WISCONSIN DEFERRED COMP PROGRAM EMPLOYEE CONTRIBUTIONS	934.62
EFT 061724-3	6/17/2024 Manual Check	WISCONSIN DEPT OF REVENUE STATE TAX DEPOSIT 5/16/24-5/31/24	4,916.09
EFT 061724-4	6/17/2024 Manual Check	XCEL ENERGY ELECTRIC EXPENSE	12,497.07
EFT 061924-1	6/19/2024 Manual Check	AFLAC EMPLOYEE PREMIUMS	388.66
EFT 061924-2	6/19/2024 Manual Check	CULLIGAN OF STILLWATER WATER SYSTEM RENTAL	58.00
EFT 061924-3	6/19/2024 Manual Check	KWIK TRIP INC PW/POL/GASOLINE CHARGES	712.58

GENERAL CHECKING - FIRST NATL Accounting Checks

Posted From: 6/20/2024 From Account:
Thru: 7/08/2024 Thru Account:

Check Nbr	Check Date	Payee	Amount
EFT 062624-1	6/26/2024	BP BUSINESS SOLUTIONS	370.79
	Manual Check	PW/PKS/GASOLINE CHARGES	
EFT 062624-2	6/26/2024	HSA BANK	15.00
	Manual Check	ACCOUNT FEES	
EFT 062624-3	6/26/2024	WISCONSIN RETIREMENT SYSTEM	28,566.70
	Manual Check	MAY RETIREMENT	
EFT 062824-1	6/28/2024	FEDERAL TAX PYMT	13,922.37
	Manual Check	FEDERAL TAX DEPOSIT	
EFT 062824-2	6/28/2024	HSA BANK	1,316.24
	Manual Check	EMPLOYEE CONTRIBUTIONS	
EFT 062824-3	6/28/2024	WISCONSIN DEFERRED COMP PROGRAM	934.62
	Manual Check	EMPLOYEE CONTRIBUTIONS	
EFT 062824-4	6/28/2024	WISCONSIN DEPT OF REVENUE	2,333.14
	Manual Check	STATE TAX DEPOSIT 6/1/24-6/15/24	
EFT 070124-1	7/01/2024	DELTA DENTAL OF WISCONSIN	1,712.94
	Manual Check	JULY DENTAL INSURANCE PREMIUMS	
EFT 070124-2	7/01/2024	HEALTH PARTNERS	28,627.41
	Manual Check	JULY HEALTH INSURANCE PREMIUMS	
EFT 070124-3	7/01/2024	XCEL ENERGY	34.19
	Manual Check	ELECTRIC EXPENSE	
EFT 070124-4	7/01/2024	PRINCIPAL LIFE INSURANCE CO	83.36
	Manual Check	JULY PREMIUMS	
EFT 070224-1	7/02/2024	XCEL ENERGY	113.01
	Manual Check	ELECTRIC EXPENSE	
EFT 070324-1	7/03/2024	WM CORPORATE SERVICES INC	354.99
	Manual Check	JUNE SERVICES	
		Grand Total	153,166.35

GENERAL CHECKING - FIRST NATL Accounting Checks

Posted From: 6/20/2024 From Account:
Thru: 7/08/2024 Thru Account:

	Amount
Total Expenditure from Fund # 100 - VILLAGE GENERAL FUND	129,968.21
Total Expenditure from Fund # 470 - CAPITAL IMPROVEMENTS	11,953.59
Total Expenditure from Fund # 610 - WATER UTILITY FUND	2,393.20
Total Expenditure from Fund # 620 - SEWER UTILITY FUND	8,851.35
Total Expenditure from all Funds	153,166.35

Form
AB-220

Temporary Alcohol Beverage License

Municipality

License(s) Requested	Fees	
☐ Temporary "Class B" Wine ☑ Temporary Class "B" Beer	License Fees	$ 10.00
	Background Check	$ ~~7.00~~
	Total Fees	$ 10.00 ~~7.00~~

Part A: Organization Information

1. Organization Name
Apple River Cruizers

2. Organization Permanent Address
304 Spring St.

3. City: Somerset
4. State: WI
5. Zip Code: 54025

6. Mailing Address (if different from permanent address)

7. FEIN
8. Date of Organization/Incorporation
9. State of Organization/Incorporation: WI

10. Phone
11. Email: TTIverson56@Gmail.com

12. Organization type *(check one)*
☒ Bona Fide Club ☐ Church ☐ Fair Association/Agricultural Society ☐ Veteran's Organization
☐ Lodge/Society ☐ Chamber of Commerce or similar Civic or Trade Organization under ch. 181, Wis. Stats.

13. Is this organization required to hold a Wisconsin Seller's permit? ..... ☐ Yes ☒ No

14. Wisconsin Seller's Permit Number (if applicable)

Part B: Individual Information

List the name, title, and phone number for all officers, directors, and agent of the organization. Include an Individual Questionnaire (Form AB-100) for each person listed below. Attach additional sheets if necessary.

Corporations must also include Alcohol Beverage Appointment of Agent (Form AB-101).

Last Name	First Name	Title	Phone
Tracy Iverson		Vice Pres.	715-410-0334
Steve Zitzer		Pres.	414-630-0543
Dave Lentch		Treasurer	651-503-0399

Continued →

Part C: Event Information

1. Name of Event (if applicable)
Apple River Car Show

2. Dates of Operation
8-3-24

3. Hours of Operation
8-4

4. Premises Address
Village Park

5. City
Somerset

6. State
WI

7. Zip Code
54025

8. County
St. Croix

9. Governing Municipality ☐ City ☐ Town ☒ Village of: Somerset

10. Aldermanic District

11. Organizer of Event (if not the named applicant)
Tracy Everson

12. Email and/or Phone Number for Organizer of Event
715-410-0334

13. Organizer Website

14. Event Website

15. Premises Description - Describe the building or buildings and any outside areas where alcohol beverages and records are sold, stored, or consumed, and related records are kept. Describe all rooms within the building, including living quarters. Authorized alcohol beverage activities and storage of records may occur only on the premises described in this application. Attach a map or diagram and additional sheets if necessary.

Part D: Attestation

Who must sign this application?

- one officer or director of the nonprofit organization

READ CAREFULLY BEFORE SIGNING: Under penalty of law, I have answered each of the above questions completely and truthfully. I agree that I am acting solely on behalf of the applicant organization and not on behalf of any other individual or entity seeking the license. Further, I agree that the rights and responsibilities conferred by the license(s), if granted, will not be assigned to another individual or entity. I agree to operate according to the law, including but not limited to, purchasing alcohol beverages from Wisconsin-permitted wholesalers. I understand that lack of access to any portion of a licensed premises during inspection will be deemed a refusal to allow inspection. Such refusal is a misdemeanor and grounds for revocation of this license. I understand that any license issued contrary to Wis. Stat. Chapter 125 shall be void under penalty of state law. I further understand that I may be prosecuted for submitting false statements and affidavits in connection with this application, and that any person who knowingly provides materially false information on this application may be required to forfeit not more than $1,000 if convicted.

Last Name
Iverson

First Name
Tracy

M.I.

Title
Vice Pres.

Email
TTIverson56@Gmail.com

Phone
715-410-0334

Signature
TyT

Date
5-22-24

Part E: For Clerk Use Only

Date Application Was Filed With Clerk
06/05/2024

License Number

Date License Granted

Date License Issued

Signature of Clerk/Deputy Clerk

FOR BIDDING ONLY
NOT FOR CONSTRUCTION

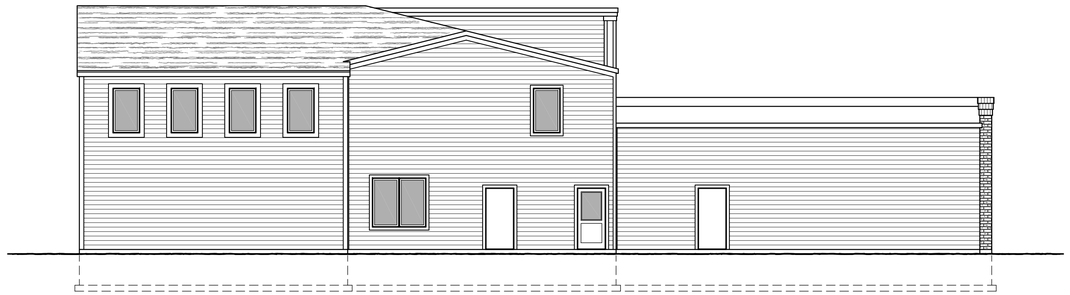

REAR ELEVATION 1/8" = 1'-0"

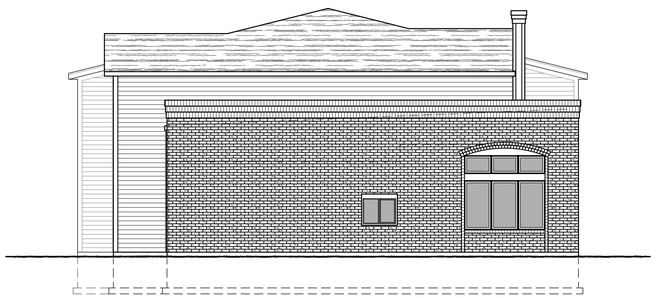

LEFT ELEVATION 1/8" = 1'-0"

RIGHT ELEVATION 1/8" = 1'-0"

MARVIN ESSENTIAL
WINDOW SERIES

FRONT ELEVATION 1/4" = 1'-0"

4'-0" POURED CONC. FOUNDATION
9'-1 1/8" CEILING @ MAIN LEVEL

© Iain's Drawing Room, LLC 2023

Copyright for these drawings is owned by Iain's Drawing Room, Upon payment of all fees due to Iain's Drawing Room, a limited license is granted to use these plans to build one structure. Iain's Drawing Room reserves all rights. These plans may not be re-used for any additional structures, may not be assigned or copied, and may not be modified or used in any redesign without the prior written consent of Iain's Drawing Room

#23-165 IAH

Iain's Drawing Room LLC
RESIDENTIAL DESIGN & DRAFTING
iain@iainsdrawingroom.com
C: 612.716.5825 D: 1.51.653.1724

Wittstock Builders LLC
715.760.8223

PRELIM 12-27-23

RE/SIDENCE FOR:
Peterson Building - Somerset
2xx Main Street, Somerset, WI 54025

PROJECT SQ. FT.	
MAIN LEVEL	4,992
UPPER LEVEL	3,060
TOTAL	8,052

SHEET: 1 OF

FOR BIDDING ONLY
NOT FOR CONSTRUCTION

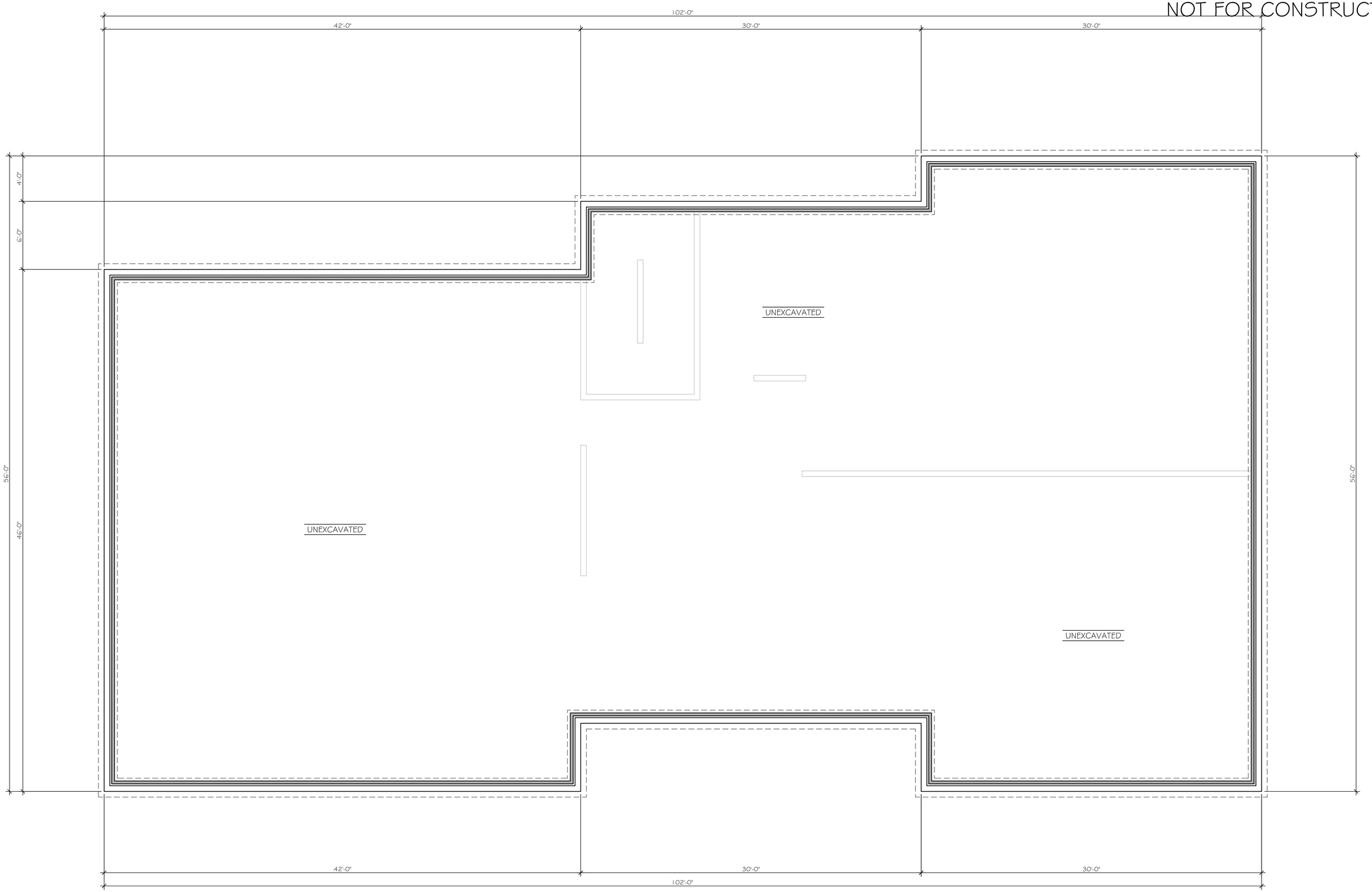

LOWER LEVEL PLAN 1/4" = 1'-0"

4'-0" POURED CONC. FOUNDATION

© Iain's Drawing Room, LLC 2023

Copyright for these drawings is owned by Iain's Drawing Room. Upon payment of all fees due to Iain's Drawing Room, a limited license is granted to use these plans to build one structure. Iain's Drawing Room reserves all rights. These plans may not be re-used for any additional structures, may not be assigned or copied, and may not be modified or used in any redesign without the prior written consent of Iain's Drawing Room

#23-165 IAH

Iain's Drawing Room LLC
RESIDENTIAL DESIGN & DRAFTING
iain@iainsdrawingroom.com
C: 612.716.5825 D: 651.653.1724

Wittstock Building LLC
715.760.8223

PRELIM 12-27-23

REFERENCE FOR:
Peterson Building - Somerset
2xx Main Street, Somerset, WI 54025

PROJECT SQ. FT.	
MAIN LEVEL	4,992
UPPER LEVEL	3,060
TOTAL	8,052

SHEET:
2 OF

FOR BIDDING ONLY
NOT FOR CONSTRUCTION

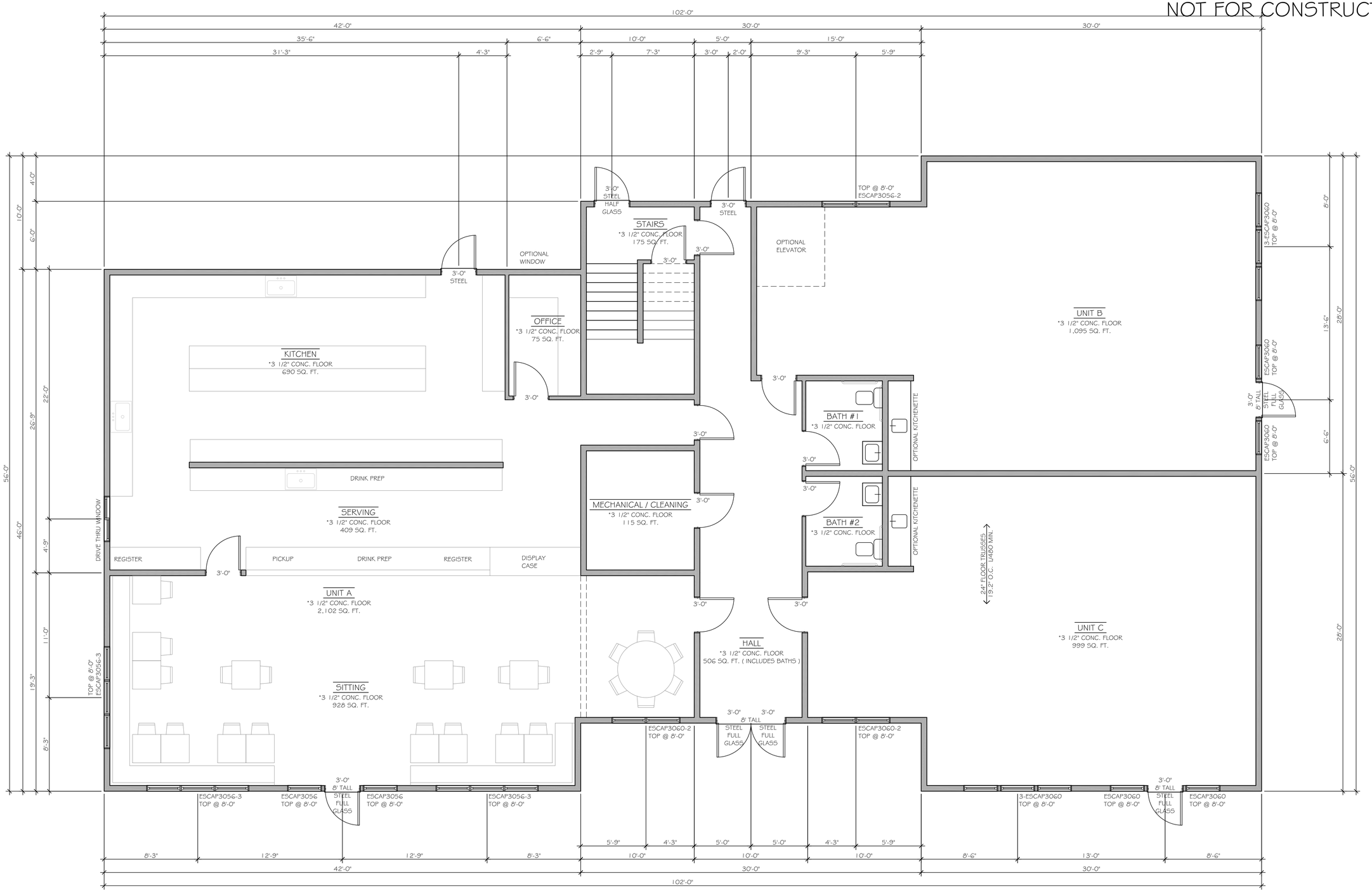

MAIN LEVEL PLAN 1/4" = 1'-0"

9'-1 1/8" CEILING @ MAIN LEVEL

© Iain's Drawing Room, LLC 2023

Copyright for these drawings is owned by Iain's Drawing Room, Upon payment of all fees due to Iain's Drawing Room, a limited license is granted to use these plans to build one structure. Iain's Drawing Room reserves all rights. These plans may not be re-used for any additional structures, may not be assigned or copied, and may not be modified or used in any redesign without the prior written consent of Iain's Drawing Room

#23-165 1/14

Iain's Drawing Room LLC
RESIDENTIAL DESIGN & DRAFTING
iain@iainsdrawingroom.com
C: 612.716.5825 D: 651.653.1724

Wittstock Building LLC
715.760.8223

PRELIM 12-27-23

RE/ADDRESS FOR:

Peterson Building - Somerset

2xx Main Street, Somerset, WI 54025

PROJECT SQ. FT.	
MAIN LEVEL	4,992
UPPER LEVEL	3,060
TOTAL	8,052

SHEET:
3 OF

FOR BIDDING ONLY
NOT FOR CONSTRUCTION

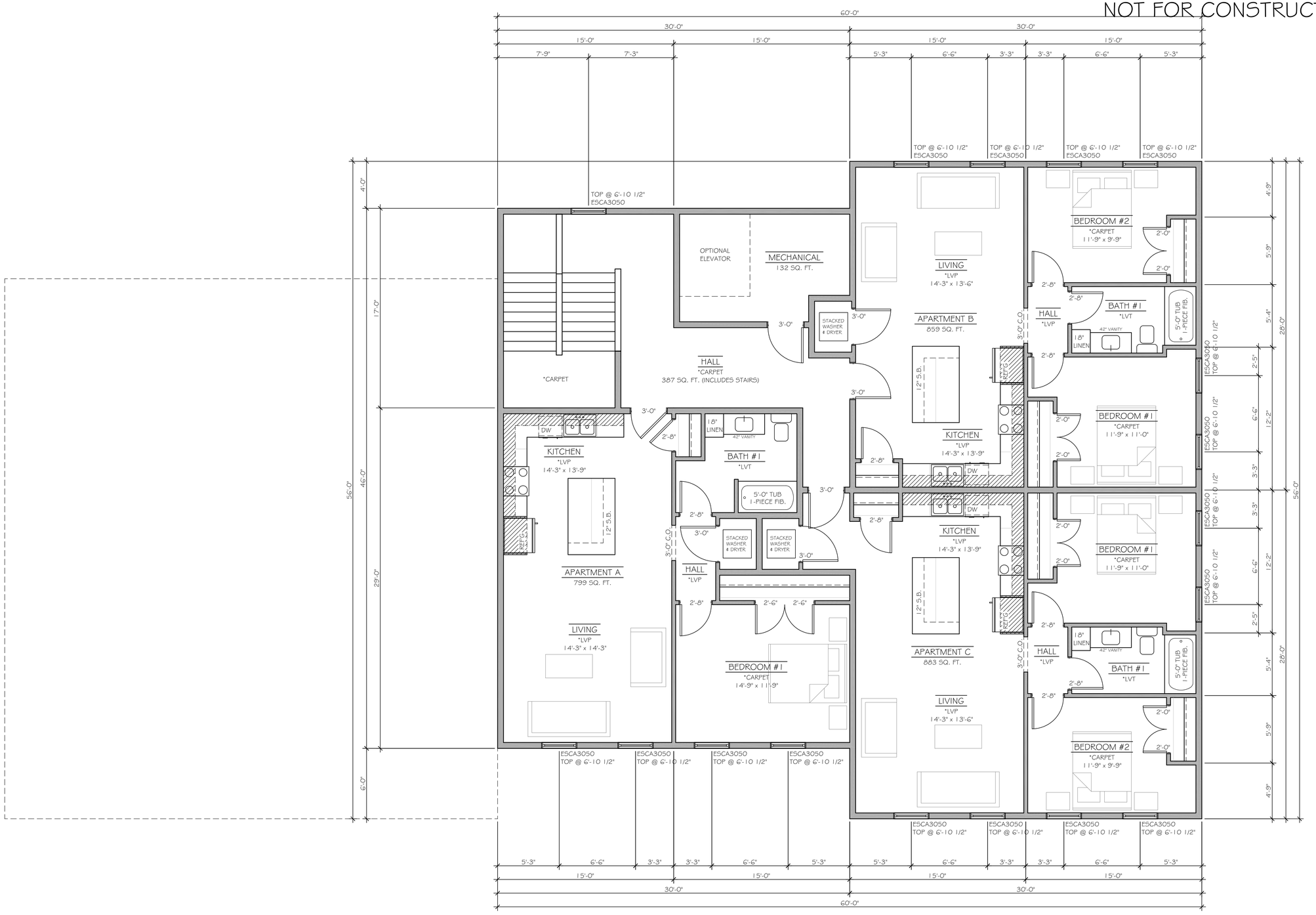

UPPER LEVEL PLAN 1/4" = 1'-0"

8'-1 1/8" CEILING @ UPPER LEVEL

© Iain's Drawing Room, LLC 2023

Copyright for these drawings is owned by Iain's Drawing Room, Upon payment of all fees due to Iain's Drawing Room, a limited license is granted to use these plans to build one structure. Iain's Drawing Room reserves all rights. These plans may not be re-used for any additional structures, may not be assigned or copied, and may not be modified or used in any redesign without the prior written consent of Iain's Drawing Room

#23-165 IAM

Iain's Drawing Room LLC
RESIDENTIAL DESIGN & DRAFTING
iain@iainsdrawingroom.com
C: 612.716.5825 D: 651.653.1241

Wittstock Builders LLC
715.760.0223

PRELIM 12-27-23

REFERENCE FOR:
Peterson Building - Somerset
2xx Main Street, Somerset, WI 54025

PROJECT SQ. FT.	
MAIN LEVEL	4,992
UPPER LEVEL	3,060
TOTAL	8,052

SHEET: 4 OF

FOR BIDDING ONLY
NOT FOR CONSTRUCTION

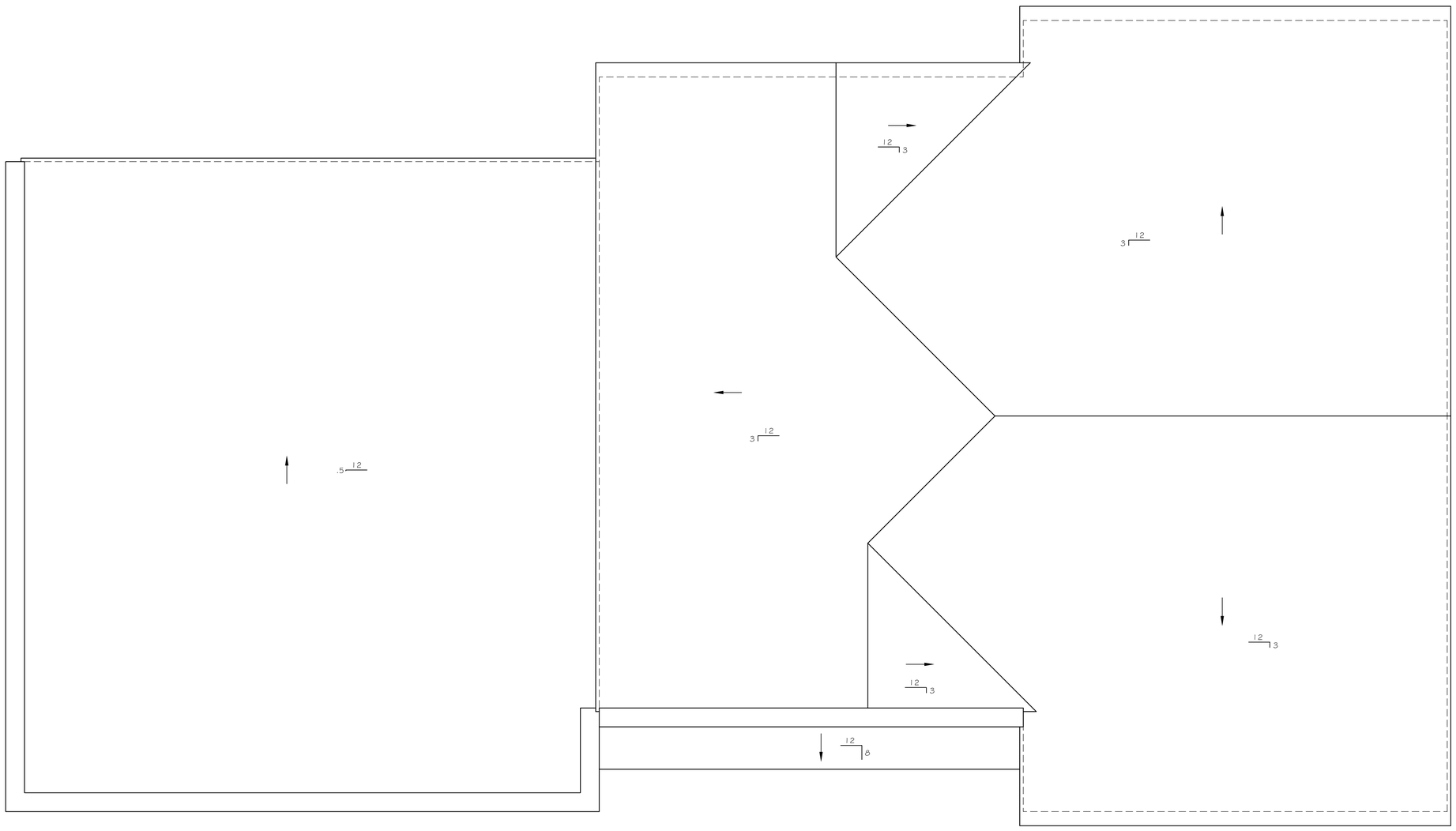

ROOF PLAN 1/4" = 1'-0"

© Iain's Drawing Room, LLC 2023

Copyright for these drawings is owned by Iain's Drawing Room, Upon payment of all fees due to Iain's Drawing Room, a limited license is granted to use these plans to build one structure. Iain's Drawing Room reserves all rights. These plans may not be re-used for any additional structures, may not be assigned or copied, and may not be modified or used in any redesign without the prior written consent of Iain's Drawing Room

#23-165 IAH

Iain's Drawing Room LLC
RESIDENTIAL DESIGN & DRAFTING
iain@iainsdrawingroom.com
C: 612.716.5825 D: 1515.533.1241

Wittstock Building LLC
715.760.0223

PRELIM 12-27-23

RE/ADDENCE FOR:

Peterson Building - Somerset

2xx Main Street, Somerset, WI 54025

PROJECT SQ. FT.	
MAIN LEVEL	4,992
UPPER LEVEL	3,060
TOTAL	8,052

SHEET:
5 OF

PETERSON BUILDING & SITE IMPROVEMENTS
WITTSTOCK BUILDERS, LLC
VILLAGE OF SOMERSET, ST. CROIX COUNTY, WI

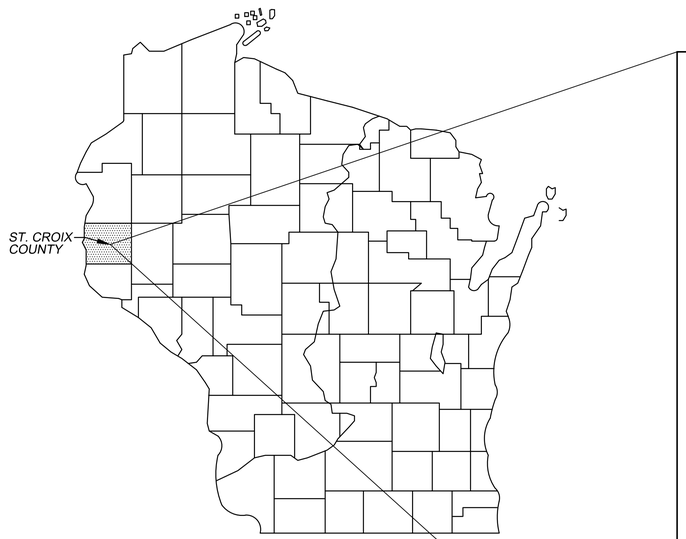

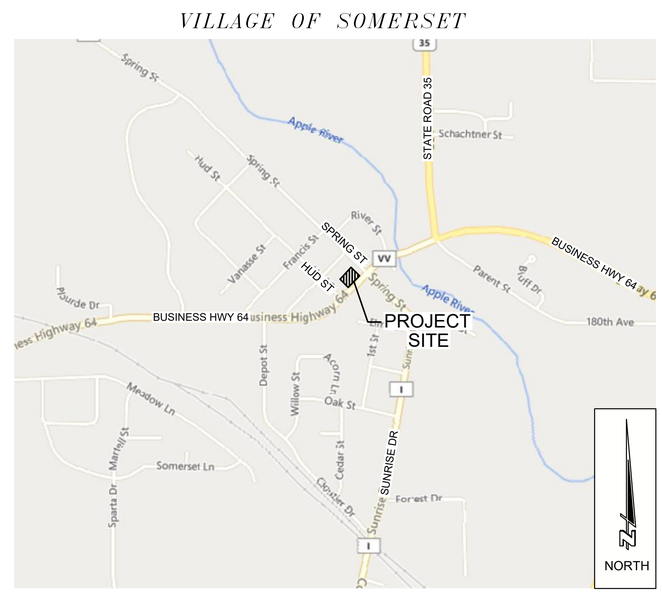

LOCATION MAP

N.T.S.

GENERAL CONSTRUCTION NOTES

1. CONTRACTOR SHALL NOTIFY UTILITIES AND HAVE ALL UTILITIES LOCATED PRIOR TO ANY EXCAVATION.
2. CONTRACTOR SHALL SALVAGE AND REPLACE TOPSOIL IN ALL DISTURBED AREAS.
3. NO TREES OR SHRUBS TO BE REMOVED WITHOUT THE PRIOR APPROVAL OF THE OWNER.
4. CONTRACTOR SHALL MAINTAIN TRAFFIC ACCESSIBILITY ALONG PROJECT.
5. SALVAGED MATERIALS TO BECOME PROPERTY OF THE OWNER.
6. CONTRACTOR SHALL MECHANICALLY COMPACT ALL TRENCHES UNDER ALL PAVED, CONCRETE, GRAVEL AND BUILDING PAD AREAS.
7. ALL TOPSOIL, ORGANIC AND UNSUITABLE MATERIAL TO BE REMOVED BEFORE FILL MATERIAL IS PLACED. NO ORGANIC, UNSUITABLE OR FROZEN MATERIAL TO BE PLACED IN FILL AREAS. ALL FILL MATERIAL AND ENGINEERED FILL TO BE MECHANICALLY COMPACTED AS RECOMMENDED BY THE GEOTECHNICAL ENGINEER.
8. EROSION CONTROL DEVICES SHALL BE IN PLACE BEFORE BEGINNING ANY DEMOLITION, EXCAVATION OR CONSTRUCTION ACTIVITIES AND CONTINUOUSLY MAINTAINED.
9. ALL UTILITY CONSTRUCTION SHALL CONFORM TO THE "WISCONSIN STANDARD SPECIFICATIONS FOR SEWER AND WATER CONSTRUCTION IN WISCONSIN," SIXTH EDITION.
10. VERIFY SANITARY SERVICE, WATER SERVICE, AND STORM SEWER CONNECTION POINTS AND SIZES WITH STATE APPROVED BUILDING PLUMBING PLANS, PRIOR TO ANY INSTALLATIONS.
11. CONTRACTOR SHALL OBTAIN PERMISSION/PERMIT FROM THE VILLAGE TO WORK IN RIGHT-OF-WAY PRIOR TO ANY WORK BEING PERFORMED WITHIN THE PUBLIC RIGHT-OF-WAY. ANY REQUIRED LANE CLOSURES OR TRAFFIC CONTROL SIGNAGE IS THE RESPONSIBILITY OF THE CONTRACTOR AND SHALL BE COORDINATED WITH VILLAGE STAFF, AS REQUIRED.

CONVENTIONAL SYMBOLS

- BOUNDARY PROPERTY LINE
- PROPOSED R.O.W.
- PROPOSED LOT LINES
- PROPOSED BIT
- PROPOSED GRAVEL
- PROPOSED STORM SEWER
- DRAINAGE EASEMENT
- EXISTING TREELINE
- EXISTING FENCE
- OR — SILT FENCE
- EROSION CONTROL MAT

PRELIMINARY
FOR REVIEW ONLY
NOT FOR CONSTRUCTION

CONTACTS	
DIGGERS HOTLINE 1-800-242-8511	GENERAL CONTRACTOR WITTSTOCK BUILDERS, LLC 715-500-2412
PROJECT ENGINEER/SURVEYOR AUTH CONSULTING & ASSOCIATES 715-381-5277	

WISCONSIN
ZACHARY P. FAGAN
E-40566
HUDSON
WI
PROFESSIONAL ENGINEER
07/03/2024

SHEET INDEX

SHEET	SHEET DESCRIPTION
C1.0	TITLE SHEET
C2.0	GENERAL NOTES
C3.0	EXISTING SITE CONDITIONS W/ AERIAL PHOTO
C3.1	EX. SITE CONDITIONS & DEMOLITION PLAN
C4.0	SITE PLAN
C5.0	GRADING PLAN
C6.0	EROSION CONTROL PLAN
C7.0	UTILITY PLAN
C8.0-C8.5	CIVIL/SITE DETAILS

RELEASED FOR REVIEW	ZPF	07/03/24	
REVISION DESCRIPTION:	NAME:	DATE:	

DRAWN BY: JVF
CHECKED BY: ZPF
DATE: 6/28/24
DWG FILE: C1.0Title
REF FILE: 7408-217
JOB NUMBER: 7408-217

DRAWING PHASE:
- OWNER REVIEW
- X AGENCY REVIEW
- BID DOCUMENT
- FOR CONSTRUCTION
- AS-BUILT DOCUMENT

CORPORATE OFFICE
406 Technology Drive East
Suite A
Menomonie, WI 54751
Tel 715-232-8490

BRANCH OFFICE
2820 Raine Street
Suite 101
Hudson, WI 54016
Tel 715-381-5277

authconsulting.com

A·C/a
Auth·Consulting/associates
S&N Land Surveying a division of A C/a

PROJECT:
PETERSON BUILDING & SITE IMPROVEMENTS
WITTSTOCK BUILDERS, LLC
VILLAGE OF SOMERSET, ST. CROIX COUNTY, WI

TITLE SHEET

SHEET NO.
C1.0

UTILITY NOTIFICATION

1. CONTRACTOR SHALL NOTIFY UTILITIES AND HAVE ALL UTILITIES LOCATED PRIOR TO ANY DEMOLITION, EXCAVATION OR CONSTRUCTION ACTIVITIES.

GENERAL NOTES

1. CONTRACTOR TO COORDINATE RELOCATION OF ANY SMALL UTILITIES, AS NECESSARY.
2. CONTRACTOR SHALL SALVAGE AND REPLACE TOPSOIL IN ALL DISTURBED AREAS.
3. NO TREES OR SHRUBS TO BE REMOVED WITHOUT THE PRIOR APPROVAL FROM THE OWNER.
4. SALVAGED MATERIALS TO BECOME PROPERTY OF THE OWNER AT THE OWNER'S DISCRETION. ANY MATERIALS NOT WANTED BY THE OWNER SHALL BE DISPOSED OF PROPERLY BY THE CONTRACTOR.
5. CONTRACTOR SHALL MECHANICALLY COMPACT ALL TRENCHES UNDER ALL PAVED, CONCRETE, GRAVEL AND BUILDING PAD AREAS.
6. EROSION CONTROL TO BE IN PLACE BEFORE BEGINNING ANY DEMOLITION, EXCAVATION, OR CONSTRUCTION AND CONTINUOUSLY MAINTAINED.
7. ANY REQUIRED STREET OR LANE CLOSURES AND ASSOCIATED TRAFFIC CONTROL SIGNAGE/DETOUR PLANS IS THE RESPONSIBILITY OF THE CONTRACTOR AND SHALL BE COORDINATED WITH VILLAGE STAFF, AS REQUIRED. ALL DETOUR PLANS AND SIGNAGE SHALL BE IN ACCORDANCE WITH THE CURRENT EDITION OF THE MUTCD. ALL PROPOSED DETOUR PLANS SHALL BE SUBMITTED TO THE VILLAGE ENGINEER FOR REVIEW AND APPROVAL A MINIMUM OF 10 DAYS PRIOR TO INSTALLATION.
8. THE CONTRACTOR SHALL ORGANIZE HIS WORK SUCH THAT SERVICE SHUT-DOWNS OCCUR ONLY WHILE CONNECTIONS TO THE EXISTING SYSTEM ARE BEING MADE. SYSTEM SHUT-DOWNS SHOULD BE HELD TO A MINIMUM PRACTICAL TIME NEEDED TO MAKE SUCH CONNECTIONS. SHUT-DOWNS SHALL NOT BE SCHEDULED OVER THE NOON LUNCH HOUR. THE CONTRACTOR SHALL NOTIFY ALL CUSTOMERS AFFECTED BY SHUT-DOWNS PRIOR TO SHUTTING OFF WATER. SHUT-DOWNS SHALL BE SCHEDULED WITH THE OWNER AT LEAST TWENTY-FOUR (24) HOURS IN ADVANCE.
9. TO MINIMIZE THE DURATION OF ANY INTERRUPTIONS OF SERVICE ACCESS, THE CONTRACTOR SHALL HAVE SUFFICIENT WORKMEN, EQUIPMENT AND MATERIALS ON SITE TO COMPLETE THE REQUIRED WORK IN A TIMELY MANNER.
10. ALL WORK WITHIN THE PROJECT SHALL BE CONDUCTED IN ACCORDANCE WITH MUTCD REQUIREMENTS CONCERNING: SIGNS, BARRICADES, LIGHTING, FLAG PERSONS, OR ANY OTHER TRAFFIC OR SAFETY DEVICES.
11. THE ENGINEER WILL NOT BE RESPONSIBLE FOR THE CONSTRUCTION, MEANS, CONTROLS, TECHNIQUES, SEQUENCE, PROCEDURES, OR SAFETY.
12. THE WORK INVOLVED TO CONNECT INTO THE EXISTING UTILITIES SHALL BE COORDINATED WITH THE APPROPRIATE VILLAGE DEPARTMENT.
13. NO DISTURBANCE TO AREAS OUTSIDE OF THE CONSTRUCTION OR DEMOLITION LIMITS SHOWN ON THE PLANS. IF NOT DIRECTED BY THE ENGINEER, CONTRACTOR SHALL RESTORE ALL AREAS TO ORIGINAL CONDITION AT THE CONTRACTOR'S EXPENSE, EVEN IF A UNIT PRICE EXISTS FOR THAT ITEM.
14. ALL BITUMINOUS AND CONCRETE REMOVAL TO BE DONE WITH SAW-CUTTING TO CREATE A STRAIGHT CLEAN MATCHING SURFACE.
15. CONTRACTOR SHALL OBTAIN PERMISSION/PERMIT FROM THE VILLAGE TO WORK IN RIGHT-OF-WAY PRIOR TO ANY WORK BEING PERFORMED WITHIN THE PUBLIC RIGHT-OF-WAY. ANY REQUIRED LANE CLOSURES OR TRAFFIC CONTROL SIGNAGE IS THE RESPONSIBILITY OF THE CONTRACTOR AND SHALL BE COORDINATED WITH VILLAGE STAFF, AS REQUIRED.

GENERAL SITE NOTES

1. GENERAL PARKING STALLS ARE 9' WIDE 18' LONG AS SHOWN WITH 2 RESERVED FOR ADA PARKING. ADA STALLS TO BE 8'WIDE (MIN.) AND ADA HANDICAP VAN ACCESSIBLE WHERE SHOWN ON PLAN.
2. CONTRACTOR SHALL MAINTAIN TRAFFIC ACCESSIBILITY ALONG THE PROJECT.
3. ALL PARKING LOT STRIPING TO BE REDONE. DELINEATE PARKING STALLS WITH 4" WIDE WHITE PAINTED STRIPE. ACCESS AISLES WITH 4" WIDE STRIPES PAINTED 18" ON CENTER AND A 45 DEGREE ANGLE TO THE DIRECTION OF TRAVEL.

ADA ACCESSIBILITY NOTES

1. ACCESSIBLE ROUTE NOT TO EXCEED 1:20 (5%) SLOPE, WITH 1:48 MAX. CROSS SLOPE.
2. HANDICAP PARKING SPACES & ACCESS AISLES SHALL NOT EXCEED 1:48 MAX. SLOPE IN ANY DIRECTION.
3. ADA PARKING SPACES SHALL BE A MIN. OF 96" AND ACCESS AISLES A MIN. OF 60". TWO ADJACENT PARKING SPACES MAY SHARE A COMMON ACCESS AISLE. VAN ACCESS AISLES SHALL BE A MIN. OF 96".
4. EACH HANDICAP PARKING SPACE SHALL BE PROVIDED WITH A HANDICAP PARKING SIGN.

GRADING NOTES

1. CONTRACTOR SHALL NOTIFY UTILITIES AND HAVE ALL UTILITIES LOCATED PRIOR TO ANY CONSTRUCTION, EXCAVATION OR DEMOLITION ACTIVITIES COMMENCING.
2. CONTRACTOR TO COORDINATE WITH SMALL UTILITIES ALL REQUIRED UTILITY RELOCATION TO AVOID CONFLICTS WITH PROPOSED GRADING.
3. CONTRACTOR SHALL MECHANICALLY COMPACT ALL TRENCHES UNDER ALL PAVED, CONCRETE, GRAVEL, AND BUILDING PAD AREAS.
4. ALL TOPSOIL, ORGANIC, & UNSUITABLE MATERIAL TO BE REMOVED BEFORE FILL MATERIAL IS PLACED. NO ORGANIC, UNSUITABLE, OR FROZEN MATERIALS TO BE PLACED IN FILL AREAS. ALL FILL MATERIAL & ENGINEERED FILL TO BE MECHANICALLY COMPACTED AS RECOMMENDED BY THE GEOTECHNICAL ENGINEER.
5. ALL GRADES AND ELEVATIONS SHOWN ARE TO FINISHED GRADES, UNLESS NOTED OTHERWISE.
6. CONTRACTOR SHALL SALVAGE AND REPLACE TOPSOIL IN ALL DISTURBED AREAS.
7. ALL EXCESS & UNSUITABLE MATERIALS TO BE REMOVED FROM THE SITE BY SITE CONTRACTOR AS REQUIRED.
8. CONTRACTOR SHALL BE SOLELY RESPONSIBLE FOR DETERMINING ALL EARTHWORK QUANTITIES BASED ON THE EXISTING AND PROPOSED ELEVATIONS PROVIDED ON THE PLANS. ANY GEOTECHNICAL INVESTIGATIONS PROVIDED BY THE OWNER APPLY ONLY TO THOSE LOCATIONS THAT DATA WAS COLLECTED, AND MAY NOT BE INDICATIVE OF CONDITIONS ELSEWHERE ON THE SITE. THE CONTRACTOR IS RESPONSIBLE FOR COLLECTING ANY ADDITIONAL GEOTECHNICAL OR SURVEY DATA HE DEEMS NECESSARY TO COMPLETE AN ACCURATE ESTIMATE OF EARTHWORK QUANTITIES.
9. CONTRACTOR SHALL BE SOLELY RESPONSIBLE FOR BALANCING SITE MATERIALS. IF ONSITE EXCAVATION AND BORROW OPERATIONS DO NOT PROVIDE ENOUGH SUITABLE MATERIAL FOR FILL AREAS, THE CONTRACTOR SHALL COORDINATE AND PAY FOR EXCAVATION, TRANSPORT AND PLACEMENT OF IMPORTED MATERIAL MEETING THE SPECIFICATIONS OF THE CONTRACT DOCUMENTS. IF EXCAVATION RESULTS IN EXCESS MATERIALS, THE CONTRACTOR SHALL PROVIDE AND PAY FOR LOADING, TRANSPORT AND OFFSITE DISPOSAL OF EXCESS MATERIALS.

EROSION CONTROL NOTES

1. EROSION CONTROL DEVICES SHALL BE IN PLACE BEFORE BEGINNING ANY DEMOLITION, EXCAVATION OR CONSTRUCTION ACTIVITIES AND CONTINUOUSLY MAINTAINED.
2. INSTALL CONSTRUCTION VEHICULAR TRACKING PAD AT ENTRANCE/EXIT OF PROJECT SITE. SEE DETAIL SHEETS FOR INSTALLATION REQUIREMENTS.
3. INSTALL SILT FENCE AS SHOWN ON PLAN OR AS DIRECTED BY THE ENGINEER. SEE DETAIL SHEETS FOR SILT FENCE INSTALLATION. SILT FENCE SHALL BE MAINTAINED IN ACCORDANCE WITH SECTION 628 EROSION CONTROL OF THE WISCONSIN DOT STANDARD SPECIFICATIONS
4. INSTALL SEDIMENT LOGS AT ALL DITCH INLETS AND ANY OTHER LOCATIONS SHOWN ON PLAN OR AS DIRECTED BY THE ENGINEER. SEE DETAIL SHEETS FOR SEDIMENT LOG INSTALLATION.
5. ALL DITCH CHECKS ARE TO BE SEDIMENT LOGS. SEE DETAIL SHEETS FOR SEDIMENT LOG INSTALLATION.
6. ALL DISTURBED AREAS SHALL BE SEEDED AND MULCHED IMMEDIATELY AFTER FINAL GRADE IS ESTABLISHED IN ANY PARTICULAR AREA.
7. ALL DISTURBED SLOPES IN EXCESS OF 4:1 SHALL BE SEEDED AND PROTECTED WITH EROSION MAT(WISDOT CLASS I TYPE A) OR SHALL BE SODDED AND STAKED OR HYDROSEEDED AS AN ALTERNATIVE.
8. TEMPORARY SEED SHOULD BE APPLIED, IF CONSTRUCTION EXTENDS PAST SEPTEMBER 1ST, OF ANNUAL RYEGRASS AND OATS AT THE RATE OF 5 POUNDS PER 1000 S.F. OF AREA AND LEFT OVER WINTER. PERMANENT SEEDING SHALL BE COMPLETED THE FOLLOWING SPRING. IF TEMPORARY SEEDING CANNOT BE COMPLETED BEFORE WINTER FREEZE UP THEN ALL DISTURBED AREAS SHALL BE MULCHED AT A RATE OF 3 TONS PER ACRE AND ANCHORED ACCORDING TO THE WDNR TECHNICAL STANDARD-(1058) "MULCHING FOR CONSTRUCTION SITES." PERMANENT SEEDING SHALL BE COMPLETED THE FOLLOWING SPRING.
9. ALL EROSION CONTROL MEASURES SHALL BE LEFT IN PLACE AND MAINTAINED UNTIL RESTORATION ON SITE HAS BEEN ESTABLISHED (A MINIMUM OF 70% VEGETATION TYP.).
10. ANY SOIL STOCKPILES WHICH ARE LEFT MORE THAN 7 DAYS MUST BE PROTECTED BY SEEDING AND MULCHING, EROSION MAT, SILT FENCING, COVERING OR OTHER APPROVED METHODS. THIS DOES NOT INCLUDE FILL OR TOPSOIL PILES THAT ARE IN ACTIVE USE.
11. SITE WATERING SHALL TAKE PLACE AS CONSTRUCTION AND WEATHER CONDITIONS WARRANT TO MINIMIZE DUST POLLUTION FROM LEAVING THE SITE.
12. SITE MONITORING OF EROSION AND SEDIMENT CONTROL PRACTICES FOR MAINTENANCE NEEDS SHALL BE COMPLETED AT THE INTERVALS SPECIFIED UNTIL THE SITE IS STABILIZED. SITE MONITORING SHALL OCCUR AT LEAST WEEKLY OR WITHIN 24 HOURS AFTER A RAINFALL EVENT OF 0.5 INCHES OR GREATER. A RAINFALL EVENT SHALL BE CONSIDERED TO BE THE TOTAL AMOUNT OF RAINFALL RECORDED IN ANY CONTINUOUS 24 HOUR PERIOD. MONITORING RECORDS SHALL BE KEPT AND CONTAIN, AT A MINIMUM, THE CONDITION OF THE EROSION AND SEDIMENT CONTROL PRACTICES AT THE INTERVALS SPECIFIED AND A DESCRIPTION OF THE MAINTENANCE CONDUCTED TO REPAIR OR REPLACE EROSION AND SEDIMENT CONTROL PRACTICES.
13. OFF-SITE SEDIMENT DEPOSITION RESULTING FROM THE FAILURE OF AN EROSION OR SEDIMENT CONTROL PRACTICE SHALL BE CLEANED UP WITHIN 24 HOURS. OFF-SITE SEDIMENT DEPOSITION RESULTING FROM CONSTRUCTION ACTIVITY, THAT CREATES A NUISANCE, SHALL BE CLEANED UP BY THE END OF THE WORK DAY. IF THE FAILURE OF EROSION OR SEDIMENT CONTROL PRACTICES RESULT IN AN IMMEDIATE THREAT OF SEDIMENT ENTERING PUBLIC SEWERS OR THE WATERS OF THE STATE, PROCEDURES SHALL BE IMPLEMENTED IMMEDIATELY TO REPAIR OR REPLACE THE PRACTICES. SCRAPING OF THE STREET SHALL BE COMPLETED WITHIN 4 HOURS AND STREET SWEEPING WITHIN 24 HOURS.

GENERAL UTILITY NOTES

1. CONTRACTOR TO FIELD VERIFY AND LOCATE ALL EXISTING UTILITIES PRIOR TO ANY DEMOLITION, EXCAVATION OR CONSTRUCTION.
2. CONTRACTOR TO COORDINATE RELOCATION OF ANY SMALL UTILITIES, AS NECESSARY.
3. CONTRACTOR TO OBTAIN PERMISSION/PERMIT FROM THE VILLAGE TO WORK IN RIGHT-OF-WAY PRIOR TO ANY WORK BEING PERFORMED WITHIN THE PUBLIC RIGHT-OF-WAY. ANY REQUIRED LANE CLOSURES OR TRAFFIC CONTROL SIGNAGE IS THE RESPONSIBILITY OF THE CONTRACTOR AND SHALL BE COORDINATED WITH VILLAGE, AS REQUIRED.
4. CONTRACTOR TO VERIFY EXISTING SANITARY SEWER, STORM SEWER & EXISTING WATERMAIN CONNECTION LOCATIONS AND SIZES.
5. ALL SANITARY SEWER & SERVICES AND WATERMAIN & SERVICES CONSTRUCTION SHALL FOLLOW THE "WISCONSIN STANDARD SPECIFICATIONS FOR SEWER AND WATER CONSTRUCTION IN WISCONSIN", SIXTH EDITION.

SANITARY SEWER NOTES

1. 6" SANITARY SEWER LATERAL TO BE PVC SCHEDULE 40 PIPING.
2. 6" SANITARY SEWER LATERAL TO BE INSTALLED AT A MINIMUM OF 1.0%.
3. CONTRACTOR TO FIELD VERIFY/LOCATE THE EXISTING SANITARY SEWER MAIN AND INVERT FOR THE PROPOSED SANITARY SEWER CONNECTION.
4. SANITARY SEWER SERVICES SHALL BE INSTALLED WITH TRACER WIRE & TRACER WIRE SIGNAL BOXES, PER SPECIFICATIONS.

WATERMAIN NOTES

1. 6" WATER SERVICE LATERAL TO BE DUCTILE IRON PIPE(DIP), CLASS 52.
2. MAINTAIN 8.0' MINIMUM COVER OVER WATER SERVICE LATERAL.
3. VERIFY WATER SERVICE BUILDING CONNECTION LOCATIONS AND SIZES WITH STATE APPROVED BUILDING PLUMBING PLANS, PRIOR TO INSTALLING WATER SERVICE .
4. FINAL SIZE OF REQUIRED DIP WATER SERVICE TO BE VERIFIED BY FIRE PROTECTION DESIGNER. CONTRACTOR TO VERIFY PRIOR TO INSTALLATION
5. ALL JOINTS IN WATER LATERAL SHALL BE RESTRAINED. ALL BENDS IN THE WATERMAINS AND LATERALS SHALL BE BUTTRESSED.
6. CONTRACTOR TO FIELD VERIFY/LOCATE AND UTILIZE EXISTING 8" WATERMAIN LOCATED IN MAIN STREET FOR THE PROPOSED WATERMAIN WET TAP CONNECTION.
7. MAINTAIN A MINIMUM OF 18" OF VERTICAL SEPARATION DISTANCE FROM SANITARY SEWER AND STORM SEWER AT CROSSINGS.
8. ALL WATER LATERAL THRUST RESTRAINT SHALL FOLLOW THE CURRENT EDITION AND THE "WISCONSIN STANDARD SPECIFICATIONS FOR SEWER AND WATER CONSTRUCTION IN WISCONSIN", SIXTH EDITION.
9. INSULATION REQUIRED OVER WATER LATERAL WHERE STORM SEWER CROSSES. 4'X8'X4" RIGID EXTRUDED POLYSTYRENE BOARD CLOSED CELL(DOW CHEMICALS) OR APPROVED EQUAL.

STORM SEWER NOTES

1. ALL 12" & 15" STORM SEWER PIPING SHALL BE HDPE DUAL WALL SMOOTH INTERIOR WITH WATERTIGHT JOINTS OR APPROVED EQUIVALENT, UNLESS NOTED OTHERWISE AS RCP.
2. WHERE RCP STORM SEWER IS USED WITHIN VILLAGE STREETS, ALL "RCP" STORM SEWER PIPING SHALL BE CLASS 3 RCP PIPING OR APPROVED EQUIVALENT.
3. 6" STORM SEWER PIPING SHALL BE PVC, SCHEDULE 40 PIPING, OR APPROVED EQUIVALENT.
4. ALL HDPE & PVC STORM SEWER PIPE SHALL BE INSTALLED WITH A BROWN 18 GAGE TRACER WIRE, WHEN APPLICABLE PER SPS 382 REQUIREMENTS.

REVISION DESCRIPTION:	NAME:	DATE:
RELEASED FOR REVIEW	ZPF	07/03/24

DRAWN BY: JVF
CHECKED BY: ZPF
DATE: 6/28/24
DWG FILE: C2.0 General Notes
REF FILE: 7408-217
JOB NUMBER: 7408-217

DRAWING PHASE:
- OWNER REVIEW
- X AGENCY REVIEW
- BID DOCUMENT
- FOR CONSTRUCTION
- AS-BUILT DOCUMENT

CORPORATE OFFICE
406 Technology Drive East
Suite A
Menomonie, WI 54751
Tel 715-232-8400

BRANCH OFFICE
2820 Kahoe Street
Suite 101
Hudson, WI 54016
Tel 715-381-5277

authconsulting.com

A·C/a
Auth·Consulting/associates
S&W Land Surveying a division of A & C/a

PROJECT:
PETERSON BUILDING & SITE IMPROVEMENTS
WITTSTOCK BUILDERS, LLC
VILLAGE OF SOMERSET, ST. CROIX COUNTY, WI

GENERAL NOTES

SHEET NO.
C2.0

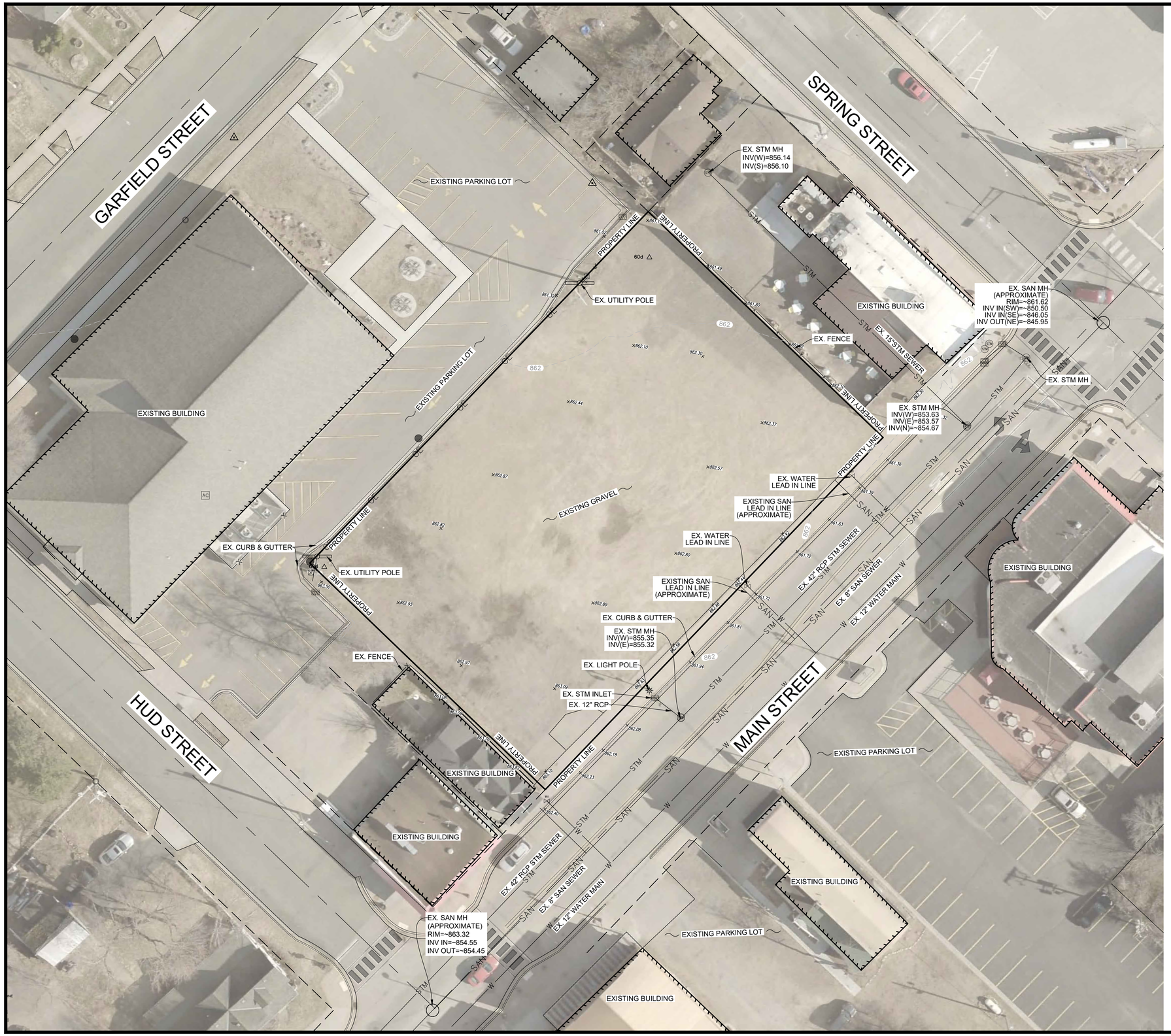

LEGEND

- EXISTING 10FT CONTOURS
- EXISTING 2FT CONTOURS
- PROPERTY BOUNDARY LINE
- EXISTING CURB
- EXISTING BUILDING
- EXISTING OVERHEAD ELECTRIC
- EXISTING SANITARY SEWER
- EXISTING STORM SEWER
- EXISTING WATER LINE
- BENCHMARK
- EXISTING POWER POLE
- EXISTING STORM INLET
- EXISTING STORM MANHOLE
- EXISTING STORM INLET
- EXISTING SANITARY SEWER MANHOLE
- EXISTING HYDRANT AND VALVE

EXISTING SITE CONDITION NOTE

EXISTING CONDITIONS SHOWN ARE BASED ON TOPOGRAPHY INFORMATION PROVIDED BY AUTH CONSULTING & ASSOCIATES, SUPPLEMENTAL INFORMATION PROVIDED BY THE VILLAGE OF SOMERSET, AND ADDITIONAL INFORMATION FROM AERIAL PHOTOS. CONTRACTOR TO FIELD VERIFY ALL EXISTING SITE CONDITIONS FOR ACCURACY PRIOR TO ANY DEMOLITION, EXCAVATION, OR CONSTRUCTION ACTIVITIES COMMENCING.

GENERAL NOTES

1. REFER TO SHEET C2.0- "GENERAL NOTES" FOR NOTES.

NORTH

SCALE: 0 10 20 40

RELEASED FOR REVIEW	ZPF 07/03/24
REVISION DESCRIPTION:	NAME: DATE:

DRAWING PHASE:

	OWNER REVIEW
X	AGENCY REVIEW
	BID DOCUMENT
	FOR CONSTRUCTION
	AS-BUILT DOCUMENT

DRAWN BY:	JVF
CHECKED BY:	ZPF
DATE:	6/28/24
DWG. FILE:	C3.0-Ex Site
REF. FILE:	7408-217
JOB NUMBER:	7408-217

CORPORATE OFFICE
406 Technology Drive East
Suite A
Menomonie, WI 54751
Tel 715-232-8490

BRANCH OFFICE
2820 Raine Street
Suite 101
Hudson, WI 54016
Tel 715-381-5677

authconsulting.com

A·C/a
Auth·Consulting/associates
S&W Land Surveying a division of A C/A

PROJECT:
PETERSON BUILDING & SITE IMPROVEMENTS
WITTSTOCK BUILDERS, LLC
VILLAGE OF SOMERSET, ST. CROIX COUNTY, WI

EX. SITE CONDITIONS W/ AERIAL PHOTO

SHEET NO.
C3.0

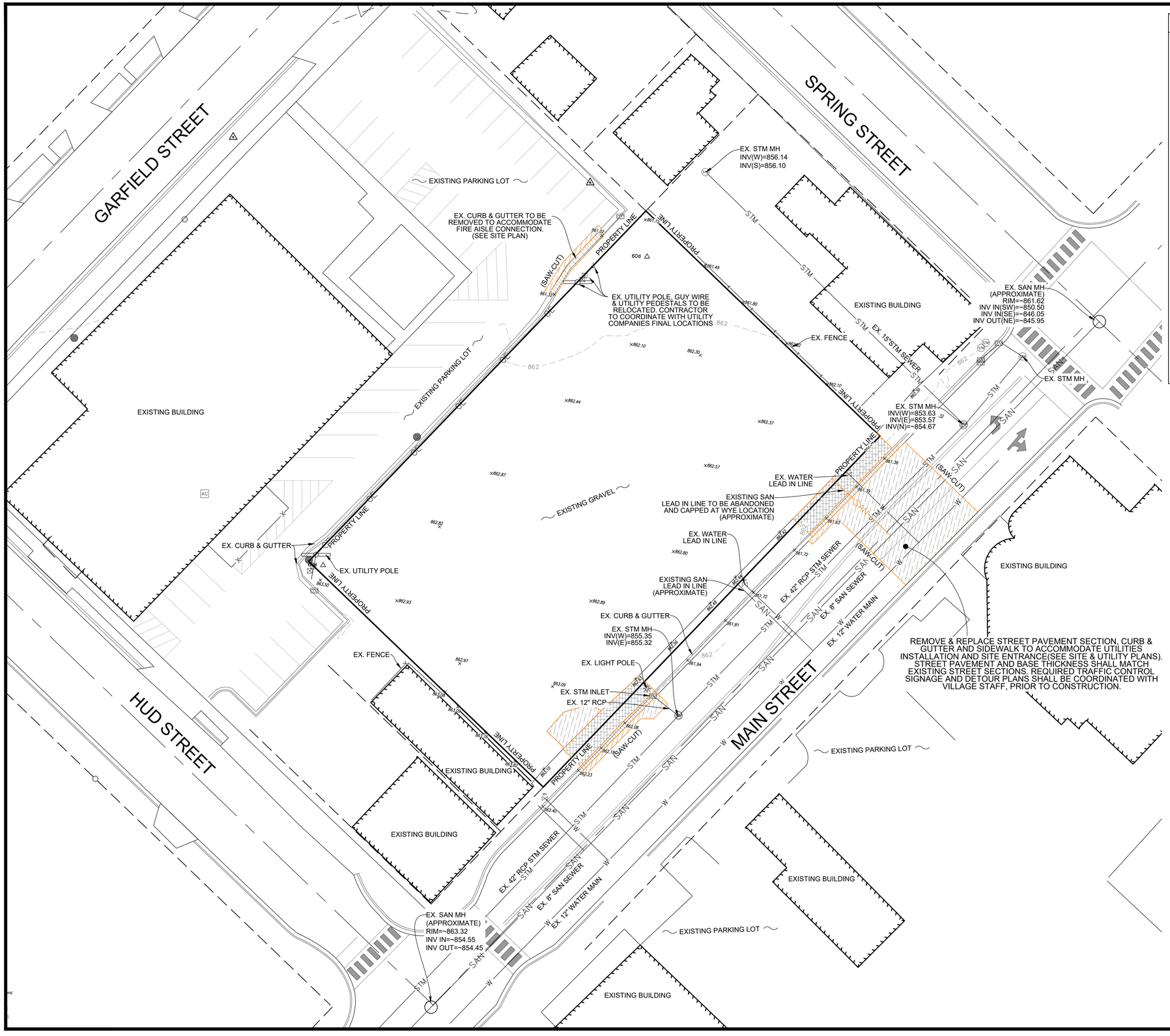

LEGEND

- EXISTING 10FT CONTOURS
- EXISTING 2FT CONTOURS
- PROPERTY BOUNDARY LINE
- EXISTING CURB
- EXISTING BUILDING
- EXISTING OVERHEAD ELECTRIC
- EXISTING SANITARY SEWER
- EXISTING STORM SEWER
- EXISTING WATER LINE
- BENCHMARK
- EXISTING POWER POLE
- EXISTING STORM INLET
- EXISTING STORM MANHOLE
- EXISTING STORM INLET
- EXISTING SANITARY SEWER MANHOLE
- EXISTING HYDRANT AND VALVE
- EXISTING BITUMINOUS PAVEMENT (TO BE REMOVED)
- EXISTING CONCRETE (TO BE REMOVED)
- EXISTING CONCRETE CURB & GUTTER (TO BE REMOVED)

EXISTING SITE CONDITION NOTE

EXISTING CONDITIONS SHOWN ARE BASED ON TOPOGRAPHY INFORMATION PROVIDED BY AUTH CONSULTING & ASSOCIATES, SUPPLEMENTAL INFORMATION PROVIDED BY THE VILLAGE OF ROBERTS, AND ADDITIONAL INFORMATION FROM AERIAL PHOTOS. CONTRACTOR TO FIELD VERIFY ALL EXISTING SITE CONDITIONS FOR ACCURACY PRIOR TO ANY DEMOLITION, EXCAVATION, OR CONSTRUCTION ACTIVITIES COMMENCING.

GENERAL NOTES

1. REFER TO SHEET C2.0- "GENERAL NOTES" FOR NOTES.

	RELEASED FOR REVIEW	ZPF 07/03/24
	REVISION DESCRIPTION:	NAME: DATE:

DRAWING PHASE:
- OWNER REVIEW
- X AGENCY REVIEW
- BID DOCUMENT
- FOR CONSTRUCTION
- AS-BUILT DOCUMENT

DRAWN BY: JVF
CHECKED BY: ZPF
DATE: 6/28/24
DWG FILE: C3.0-Ex Site
REF FILE: 7408-217
JOB NUMBER: 7408-217

CORPORATE OFFICE
406 Technology Drive East
Suite A
Menomonie, WI 54751
Tel 715-232-8490

BRANCH OFFICE
2820 Raine Street
Suite 101
Hudson, WI 54016
Tel 715-381-5677

authconsulting.com

A·C/a
Auth·Consulting/associates
S&W Land Surveying a division of A C/a

PROJECT:
PETERSON BUILDING & SITE IMPROVEMENTS
WITTSTOCK BUILDERS, LLC
VILLAGE OF SOMERSET, ST. CROIX COUNTY, WI

EX. SITE CONDITIONS & DEMOLITION PLAN

SHEET NO. C3.1

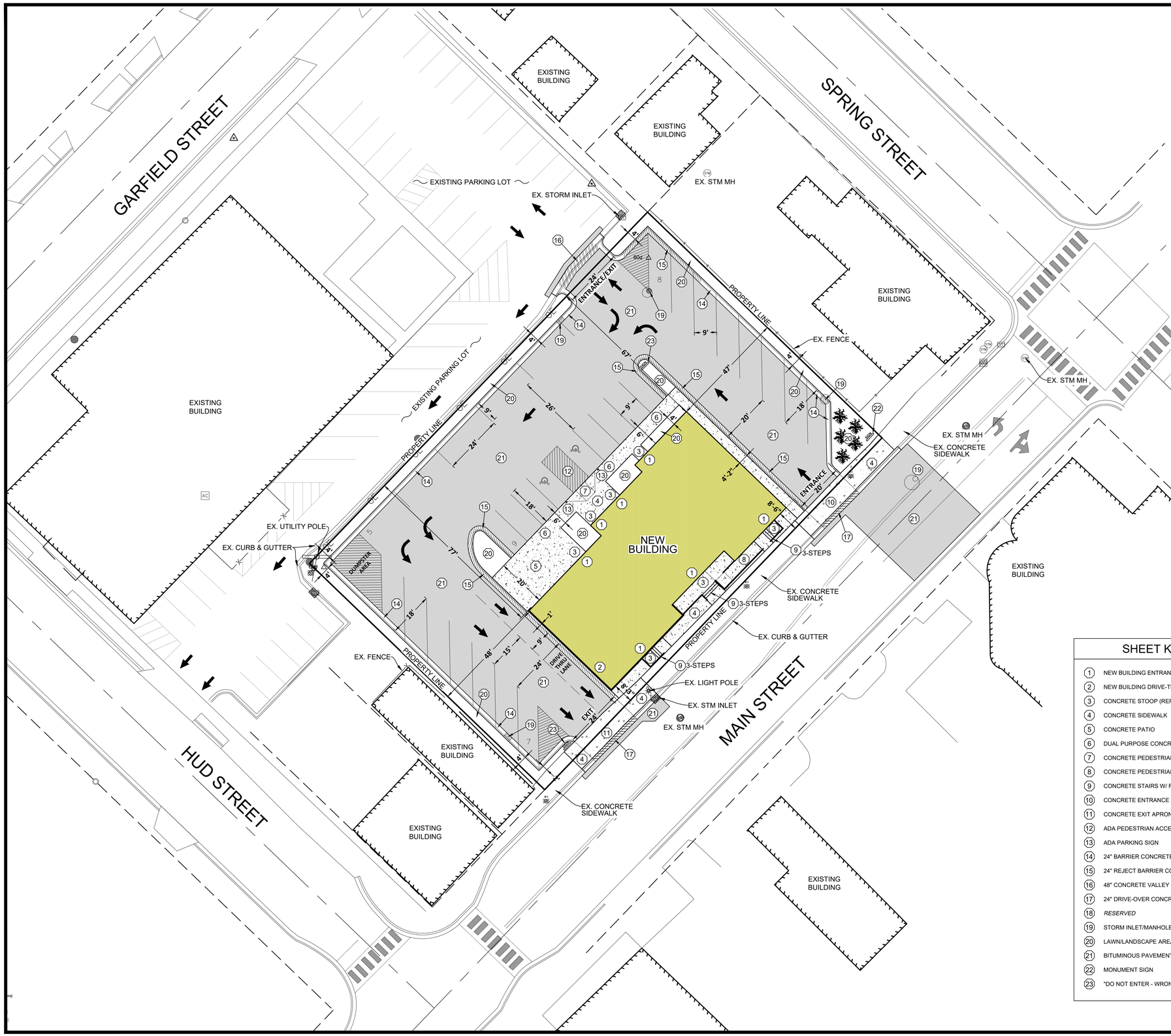

LEGEND

- PROPERTY LINE
- PROPOSED LOTLINE
- BUILDING SETBACK
- PROPOSED DRAINAGE EASEMENT
- O.E. EXISTING OVERHEAD ELECTRIC
- PROPOSED BUILDING
- PROPOSED CONCRETE SURFACE
- 48" VALLEY GUTTER
- 24" REJECT BARRIER CURB & GUTTER
- 24" DRIVE OVER CURB AND GUTTER
- PROPOSED PAVEMENT

SITE DATA

LOT AREA
0.60 ACRES

CURRENT ZONING
C1 - CENTRAL BUSINESS DISTRICT

PARKING
24 PROPOSED STALLS - 9'x18' (TYPICAL)
5 PROPOSED STALLS - 9'x24' (TYPICAL)
- INCLUDING 2 HANDICAP STALLS - 9'x18' (TYPICAL)

TOTAL PARKING STALLS = 29 STALLS

GENERAL SITE NOTES

1. REFER TO SHEET C2.0- "GENERAL NOTES" FOR GENERAL SITE NOTES AND ADA ACCESSIBILITY NOTES.

SHEET KEY

1. NEW BUILDING ENTRANCE/EXIT DOOR
2. NEW BUILDING DRIVE-THRU WINDOW
3. CONCRETE STOOP (REFER TO BUILDING PLANS)
4. CONCRETE SIDEWALK
5. CONCRETE PATIO
6. DUAL PURPOSE CONCRETE SIDEWALK
7. CONCRETE PEDESTRIAN RAMP
8. CONCRETE PEDESTRIAN RAMP W/ RAILING
9. CONCRETE STAIRS W/ RAILING
10. CONCRETE ENTRANCE APRON
11. CONCRETE EXIT APRON
12. ADA PEDESTRIAN ACCESS AISLE
13. ADA PARKING SIGN
14. 24" BARRIER CONCRETE CURB & GUTTER
15. 24" REJECT BARRIER CONCRETE CURB & GUTTER
16. 48" CONCRETE VALLEY GUTTER
17. 24" DRIVE-OVER CONCRETE CURB & GUTTER
18. *RESERVED*
19. STORM INLET/MANHOLE
20. LAWN/LANDSCAPE AREA
21. BITUMINOUS PAVEMENT
22. MONUMENT SIGN
23. "DO NOT ENTER - WRONG WAY" SIGN

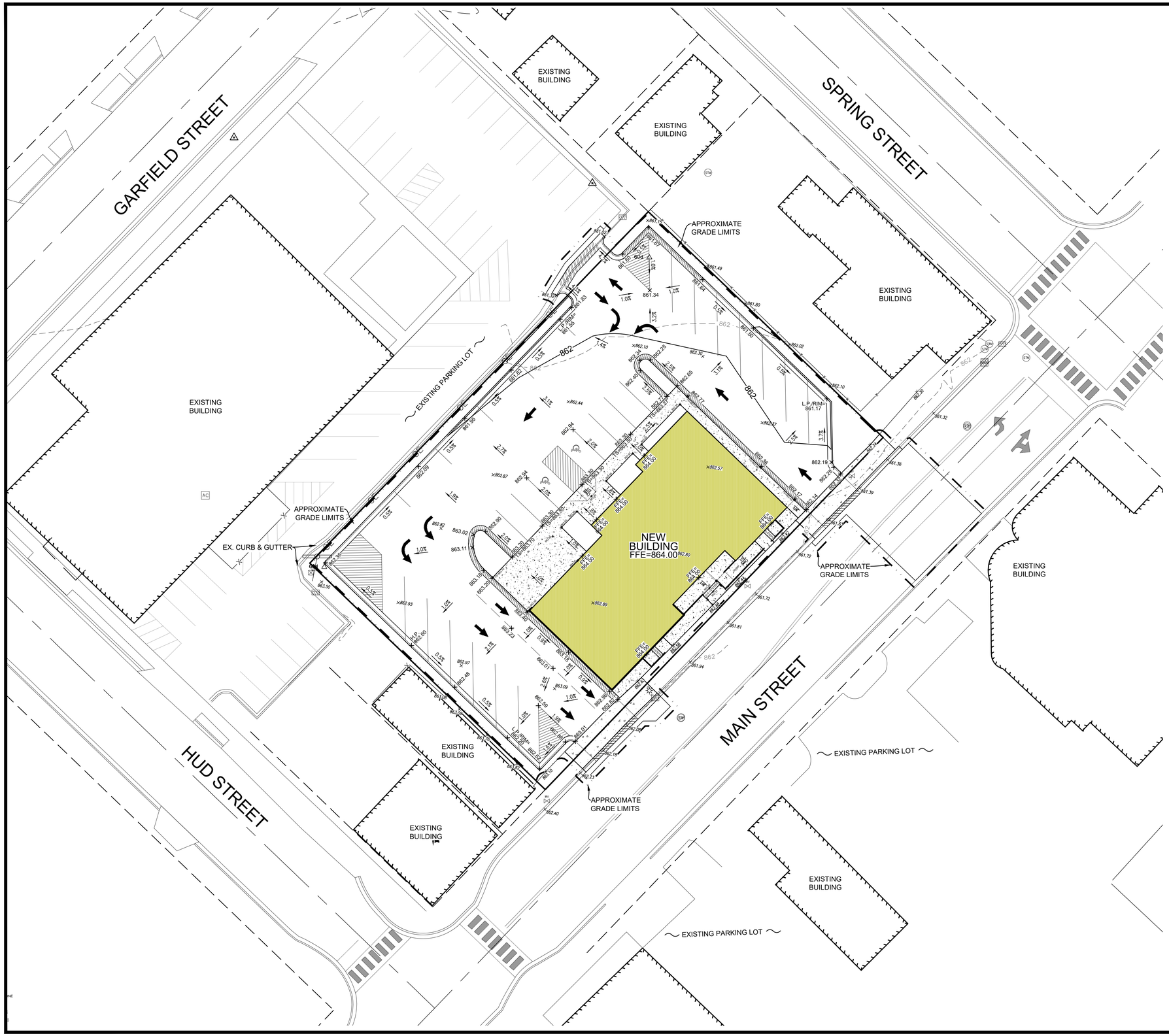

LEGEND

- PROPERTY LINE
- EXISTING 10FT CONTOURS (1030)
- EXISTING 2FT CONTOURS (1032)
- PROPOSED 10FT CONTOURS (1030)
- PROPOSED 2FT CONTOURS (1032)
- EXISTING HARD SURFACE EDGE
- GRADING LIMITS (APPROXIMATE)
- EXISTING GRADE SPOT ELEVATIONS (×862.89)
- BENCHMARK
- PROPOSED BUILDING
- PROPOSED FINISHED GRADE SPOT ELEVATIONS (ALL CURB SPOT ELEVATION SHOWN ARE AT CURB FLOWLINE UNLESS OTHERWISE NOTED) (+ 862.94)
- PROPOSED FINISHED GRADE SURFACE DRAINAGE
- RIM = RIM ELEVATION
- H.P. = HIGH POINT GRADE ELEVATION
- L.P. = LOW POINT GRADE ELEVATION
- FFE = FINISHED FLOOR ELEVATION
- TS = TOP OF SIDEWALK ELEVATION

GRADING NOTES

1. REFER TO SHEET C2.0- "GENERAL NOTES" FOR GRADING NOTES.

REVISION DESCRIPTION:	NAME:	DATE:
RELEASED FOR REVIEW	ZPF	07/03/24

DRAWN BY: JVF
CHECKED BY: ZPF
DATE: 6/28/24
DWG FILE: C5.0-Grading
REF FILE: 7408-217
JOB NUMBER: 7408-217

DRAWING PHASE:
- OWNER REVIEW
- X AGENCY REVIEW
- BID DOCUMENT
- FOR CONSTRUCTION
- AS-BUILT DOCUMENT

CORPORATE OFFICE
406 Technology Drive East
Suite A
Menomonie, WI 54751
Tel 715-232-8490

BRANCH OFFICE
2820 Raine Street
Suite 101
Hudson, WI 54016
Tel 715-381-5277

authconsulting.com

A·C/a
Auth•Consulting/associates
S&W Land Surveying a division of A C/a

PROJECT:
PETERSON BUILDING & SITE IMPROVEMENTS
WITTSTOCK BUILDERS, LLC
VILLAGE OF SOMERSET, ST. CROIX COUNTY, WI

GRADING PLAN

SHEET NO.
C5.0

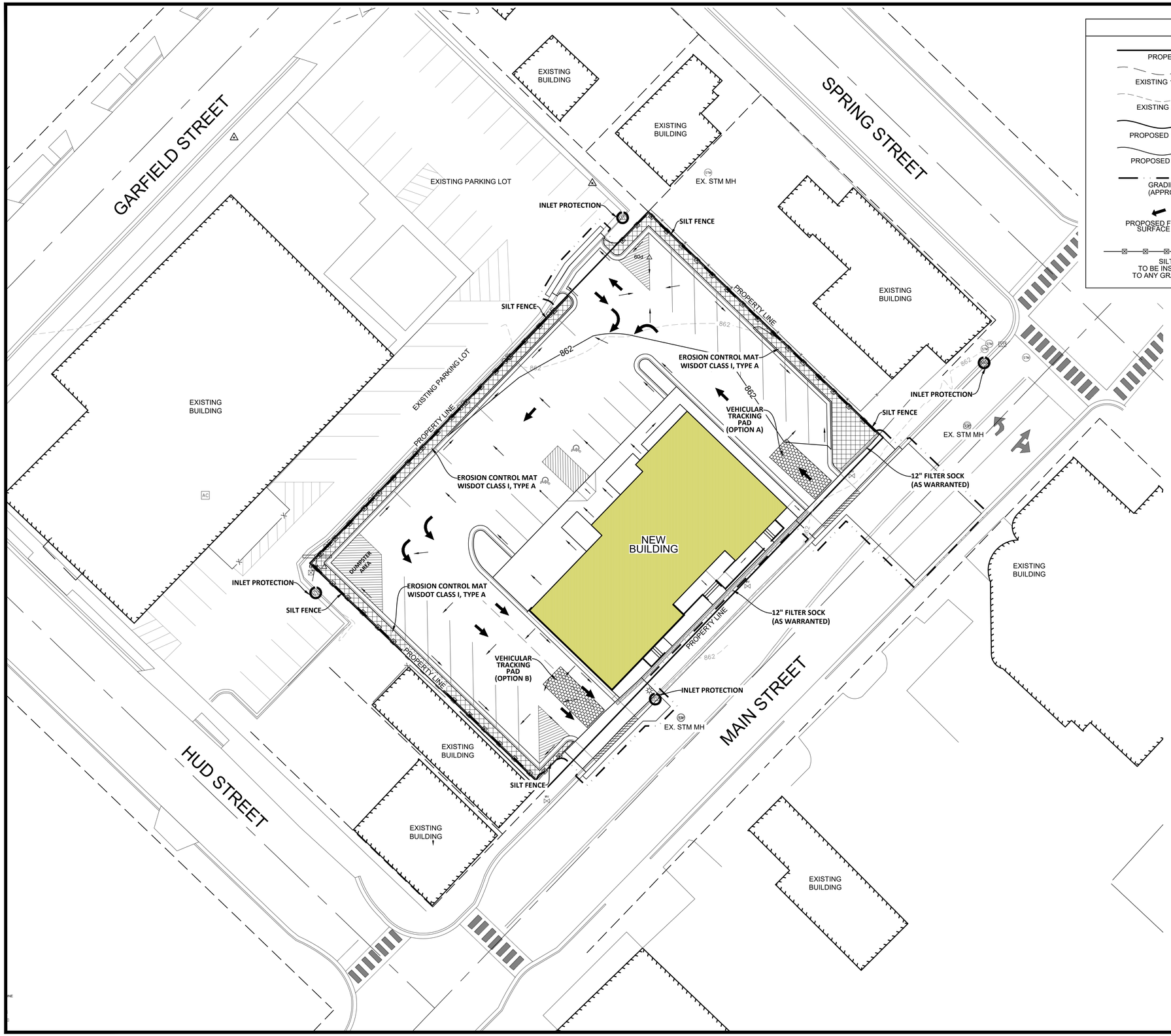

LEGEND

- PROPERTY LINE
- EXISTING 10FT CONTOURS (1030)
- EXISTING 2FT CONTOURS (1032)
- PROPOSED 10FT CONTOURS (1030)
- PROPOSED 2FT CONTOURS (1032)
- GRADING LIMITS (APPROXIMATE)
- PROPOSED FINISHED GRADE SURFACE DRAINAGE
- SILT-FENCE TO BE INSTALLED PRIOR TO ANY GRADING ACTIVTIES
- CONSTRUCTION VEHICLE TRACKING PAD
- INLET PROTECTION
- 12" FILTER SOCK (AS WARRANTED)
- EROSION CONTROL MAT WISDOT CLASS I, TYPE A

EROSION CONTROL NOTES

1. REFER TO SHEET C2.0- "GENERAL NOTES" FOR EROSION CONTROL NOTES.

DRAWING PHASE:		DRAWN BY:	JVF
	OWNER REVIEW	CHECKED BY:	ZPF
	X AGENCY REVIEW	DATE:	6/28/24
	BID DOCUMENT	DWG FILE:	C6.0-Erosion
	FOR CONSTRUCTION	REF FILE:	7408-217
	AS-BUILT DOCUMENT	JOB NUMBER:	7408-217

REVISION DESCRIPTION:	NAME:	DATE:
RELEASED FOR REVIEW	ZPF	07/03/24

CORPORATE OFFICE
406 Technology Drive East
Suite A
Menomonie, WI 54751
Tel 715-232-8490

BRANCH OFFICE
2820 Raine Street
Suite 101
Hudson, WI 54016
Tel 715-381-5277

authconsulting.com

A·C/a
Auth•Consulting/associates
S&W Land Surveying a division of A C/a

PROJECT:
PETERSON BUILDING & SITE IMPROVEMENTS
WITTSTOCK BUILDERS, LLC
VILLAGE OF SOMERSET, ST. CROIX COUNTY, WI

EROSION CONTROL PLAN

SHEET NO.
C6.0

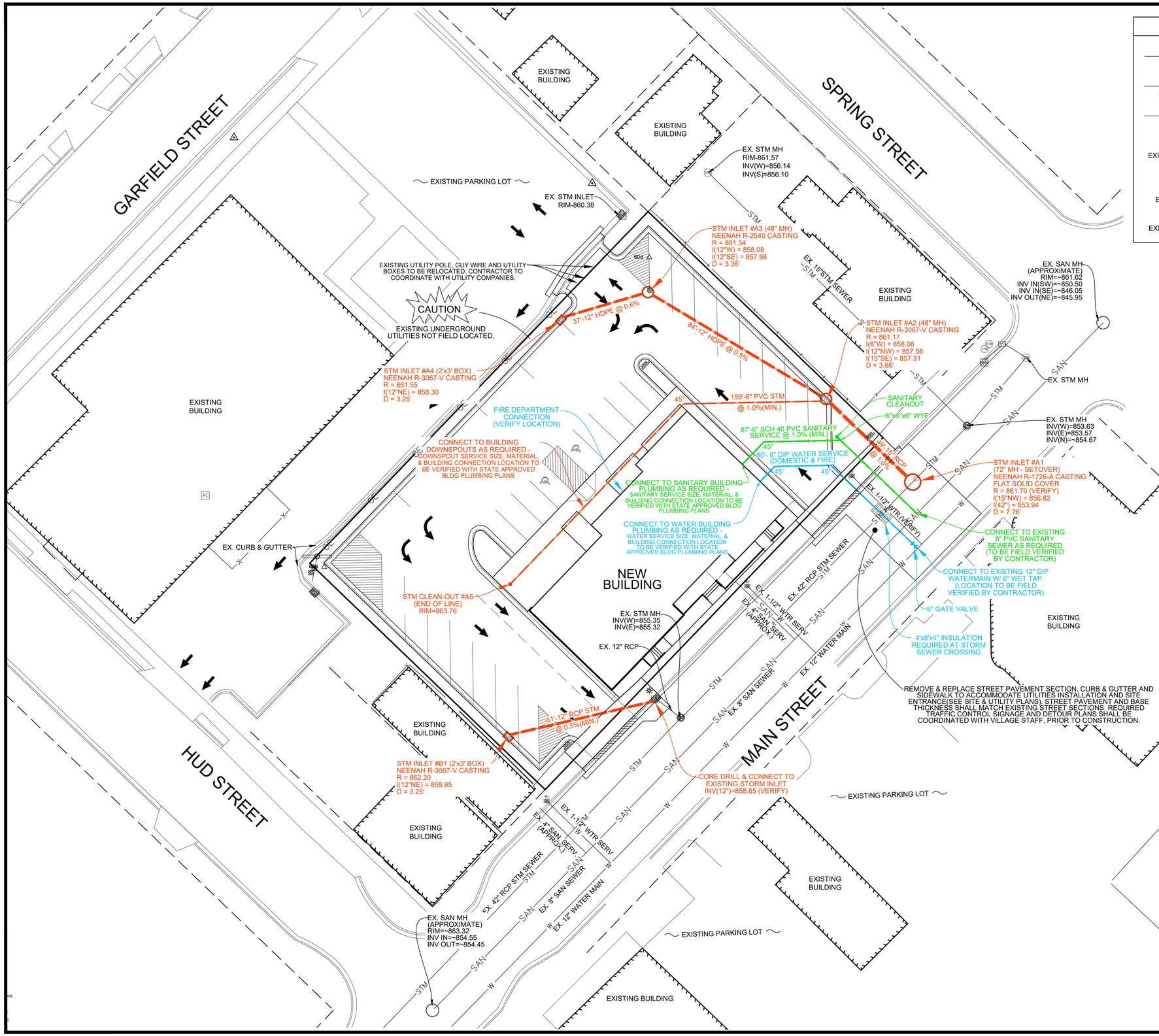

LEGEND

- EXISTING STORM SEWER
- EXISTING SANITARY SEWER
- EXISTING WATERMAIN
- EXISTING HYDRANT AND VALVE
- EXISTING CATCH BASIN
- EXISTING SANITARY SEWER
- EXISTING SEWER CLEANOUT
- PROPOSED BUILDINGS
- PROPERTY LINE
- PROPOSED STORM SEWER
- PROPOSED SANITARY SEWER
- PROPOSED WATER MAIN
- PROPOSED INSULATION

UTILITY NOTES

1. REFER TO SHEET C2.0- "GENERAL NOTES" FOR UTILITY NOTES.

RELEASED FOR REVIEW	ZPF	07/03/24
REVISION DESCRIPTION:	NAME:	DATE:

DRAWING PHASE:

	OWNER REVIEW	
X	AGENCY REVIEW	
	BID DOCUMENT	
	FOR CONSTRUCTION	
	AS-BUILT DOCUMENT	

DRAWN BY: JVF
CHECKED BY: ZPF
DATE: 6/28/24
DWG FILE: C7.0-Util
REF FILE: 7408-217
JOB NUMBER: 7408-217

CORPORATE OFFICE
406 Technology Drive East
Suite A
Menomonie, WI 54751
Tel 715-232-8490

BRANCH OFFICE
2820 Raine Street
Suite 101
Hudson, WI 54016
Tel 715-381-5277

Auth•Consulting/associates
S&W Land Surveying a division of A & C/a
authconsulting.com

PROJECT:
PETERSON BUILDING & SITE IMPROVEMENTS
WITTSTOCK BUILDERS, LLC
VILLAGE OF SOMERSET, ST. CROIX COUNTY, WI

UTILITY PLAN

SHEET NO.
C7.0

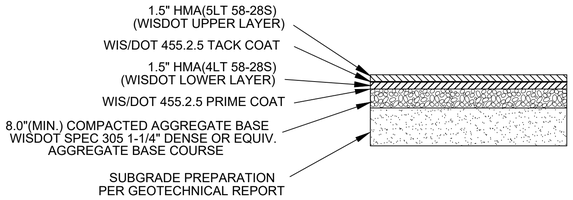

NOTE:

1. BITUMINOUS PAVEMENT SHALL CONFORM TO SECTION 460 HOT ASPHALT PAVEMENT OF THE WISCONSIN DOT STANDARD SPECIFICATIONS.

TYPICAL FINISHED SECTION FOR PAVED SURFACE (LIGHT-DUTY)

N.T.S.

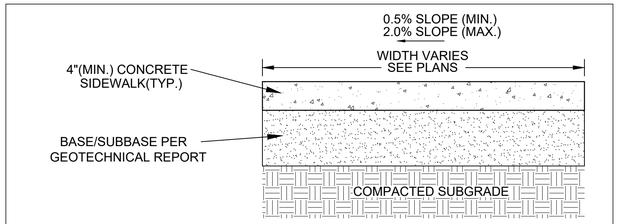

- TOOLED TRANSVERSE JOINTS REQUIRED EVERY 4'-5'(TYP.),
- TRANSVERSE EXPANSION JOINTS REQUIRED EVERY 40'(TYP.), 60'(MAX)

TYPICAL FINISHED SECTION FOR CONCRETE SIDEWALK AREAS

N.T.S.

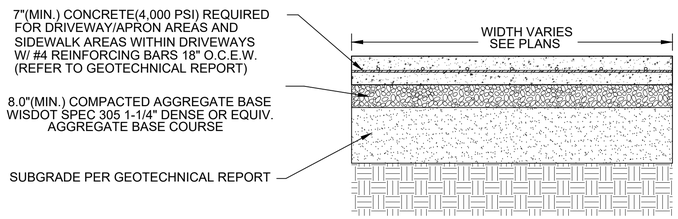

- REFER TO GEOTECHNICAL REPORT FOR CONTRACTION JOINTS AND CONSTRUCTION JOINT REQUIREMENTS.

TYPICAL FINISHED SECTION FOR CONCRETE AREAS WITH VEHICULAR TRAFFIC

N.T.S.

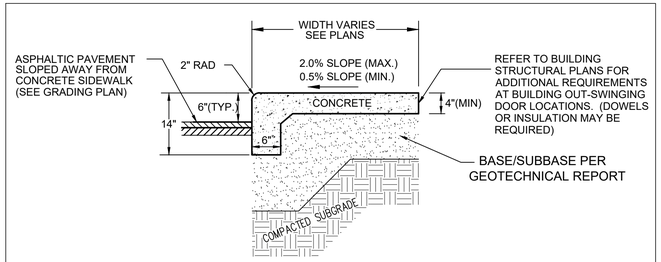

- TOOLED TRANSVERSE JOINTS REQUIRED EVERY 4'-5'(TYP.),
- TRANSVERSE EXPANSION JOINTS REQUIRED EVERY 40'(TYP.), 60'(MAX)

TYPICAL DUAL PURPOSE CONCRETE SIDEWALK

N.T.S.

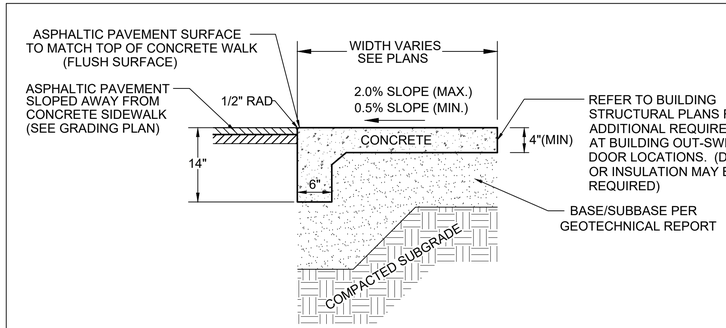

- TOOLED TRANSVERSE JOINTS REQUIRED EVERY 4'-5'(TYP.),
- TRANSVERSE EXPANSION JOINTS REQUIRED EVERY 40'(TYP.), 60'(MAX)

DUAL PURPOSE CONCRETE SIDEWALK AT FLUSH PAVEMENT LOCATIONS

N.T.S.

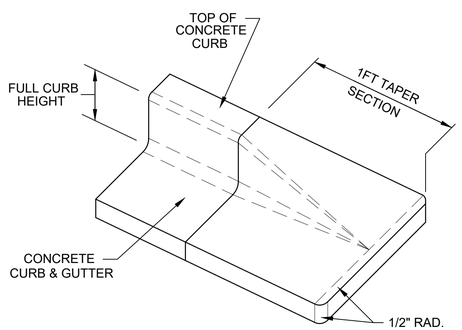

NOSE-DOWN CURB SECTION

N.T.S.

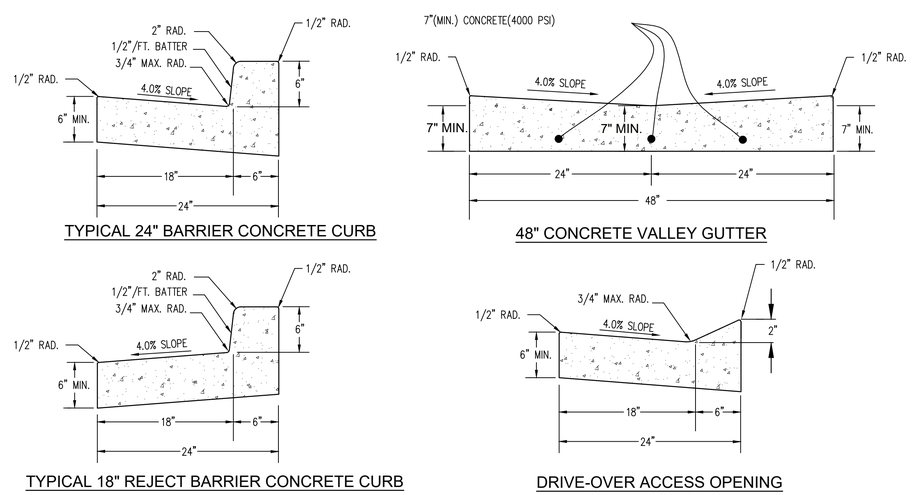

TYPICAL 24" BARRIER CONCRETE CURB

48" CONCRETE VALLEY GUTTER

TYPICAL 18" REJECT BARRIER CONCRETE CURB

DRIVE-OVER ACCESS OPENING

TYPICAL CONCRETE CURB AND GUTTER SECTIONS

N.T.S.

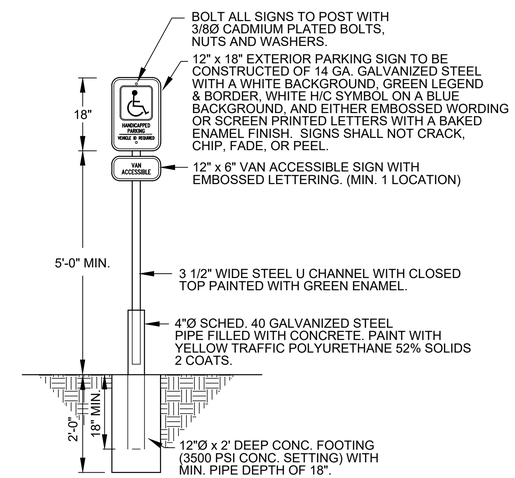

TYPICAL HANDICAP PARKING SIGN DETAIL

N.T.S.

DRAWN BY:	JVF
CHECKED BY:	ZPF
DATE:	6/28/24
DWG FILE:	C8.0-Details
REF FILE:	7408-217
JOB NUMBER:	7408-217

REVISION DESCRIPTION:	NAME:	DATE:
RELEASED FOR REVIEW	ZPF	07/03/24

DRAWING PHASE:

- OWNER REVIEW
- X AGENCY REVIEW
- BID DOCUMENT
- FOR CONSTRUCTION
- AS-BUILT DOCUMENT

CORPORATE OFFICE
406 Technology Drive East
Suite A
Menomonie, WI 54751
Tel 715-232-8490

BRANCH OFFICE
2820 Raine Street
Suite 101
Hudson, WI 54016
Tel 715-381-5677

A·C/a
Auth•Consulting/associates
S&M Land Surveying a division of A·C/a

PROJECT:

PETERSON BUILDING & SITE IMPROVEMENTS
WITTSTOCK BUILDERS, LLC
VILLAGE OF SOMERSET, ST. CROIX COUNTY, WI

CIVIL/SITE DETAILS

SHEET NO.
C8.0

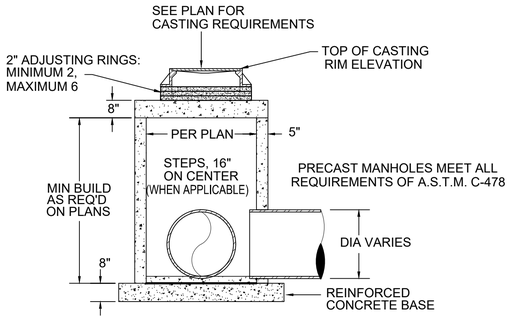

NOTES:

1. VERTICAL ALIGNMENT OF STEPS SHALL NOT BE ABOVE PIPES THAT ARE GREATER THEN TWENTY-FOUR (24) INCHES IN DIAMETER.

CATCH BASIN STORM MANHOLE WITH CASTING ASSEMBLY DETAIL

N.T.S.

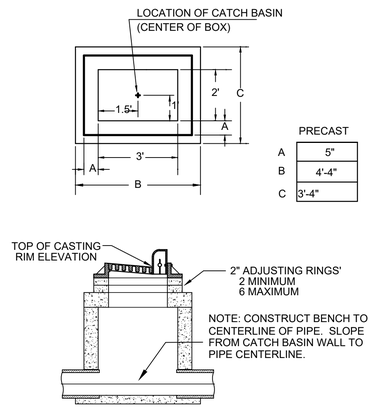

	PRECAST
A	5"
B	4'-4"
C	3'-4"

CATCH BASIN TYPE A DETAIL 2'x3' BOX WITH CASTING ASSEMBLY

N.T.S.

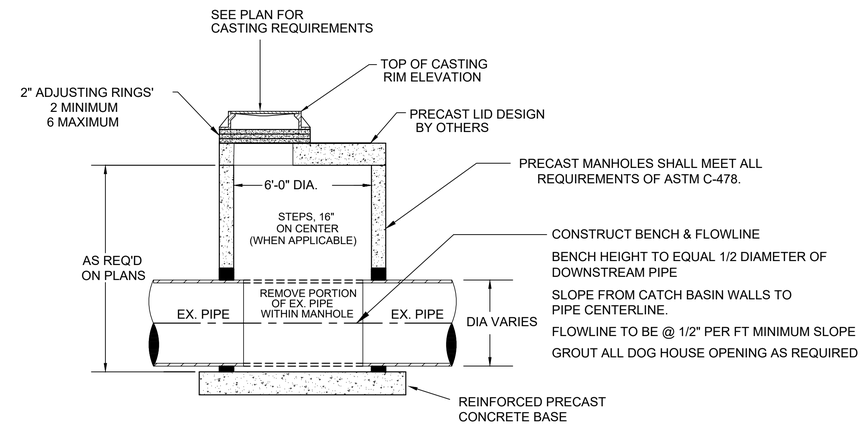

NOTES:

1. VERTICAL ALIGNMENT OF STEPS SHALL NOT BE ABOVE PIPES THAT ARE GREATER THEN TWENTY-FOUR (24) INCHES IN DIAMETER.

CATCH BASIN DETAIL WITH 72" DIA. SET-OVER STORM MANHOLE WITH CASTING ASSEMBLY

N.T.S.

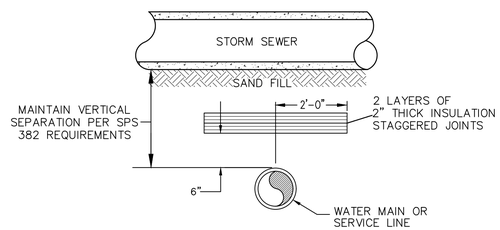

STORM SEWER CROSSING ABOVE

N.T.S.

NOTES:

1. INSULATION SHALL BE CENTERED ON THE PIPE.
2. RIGID, EXTRUDED POLYSTYRENE BOARD INSULATION, CLOSED CELL (DOW CHEMICAL) OR APPROVED EQUAL.
3. INSULATION BOARD SIZE SHALL BE 48"X96" WITH 2" THICKNESS AND HAVE THERMAL RESISTANCE (R)-5.0 AND A MINIMUM COMPRESSIVE STRENGTH OF 25psi.
4. ALL STORM SEWER CONFLICTS OR INTERSECTIONS SHALL BE INSULATED AS APPROVED BY FIELD ENGINEER TO EQUATE TO 8 FEET OF MINIMUM COVER (1INCH CLOSED CELL INSULATION = 1 FOOT OF SOIL).
5. INSULATION LENGTH ALONG WATER LINE SHALL BE A MINIMUM OF 4 FEET GREATER THAN THE OUTSIDE DIAMETER OF THE STORM SEWER PIPE.

4'X8' INSULATION DETAILS

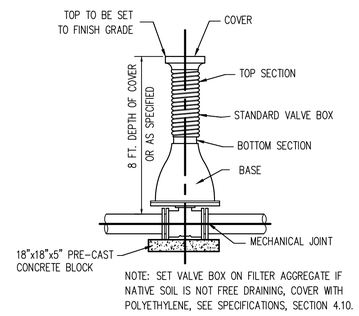

VALVE AND BOX INSTALLATION

N.T.S.

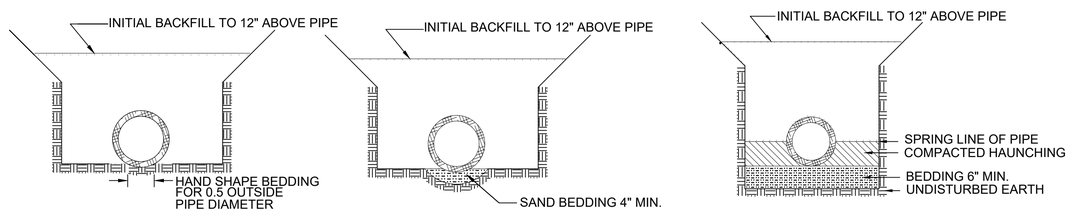

CLASS C BEDDING
N.T.S.

CLASS B BEDDING
N.T.S.

TYPICAL BEDDING OF PLASTIC PIPE
N.T.S.

TYPICAL PIPE BEDDING DETAILS

N.T.S.

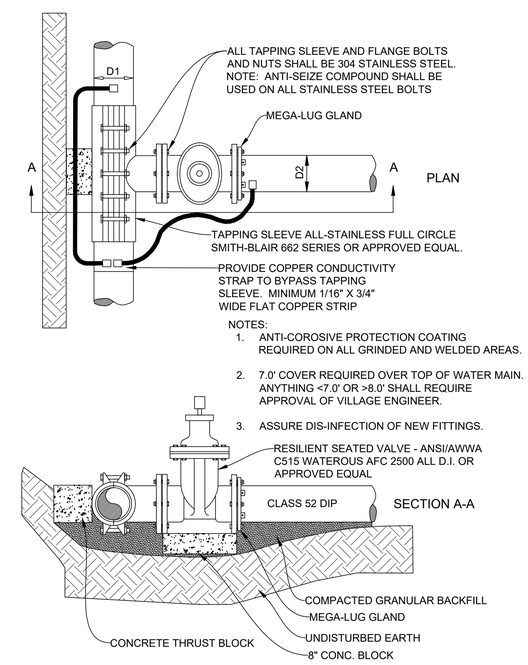

NOTES:

1. ANTI-COROSIVE PROTECTION COATING REQUIRED ON ALL GRINDED AND WELDED AREAS.
2. 7.0' COVER REQUIRED OVER TOP OF WATER MAIN. ANYTHING <7.0' OR >8.0' SHALL REQUIRE APPROVAL OF VILLAGE ENGINEER.
3. ASSURE DIS-INFECTION OF NEW FITTINGS.

WATER MAIN WET TAP

N.T.S.

DRAWN BY:	JVF
CHECKED BY:	ZPF
DATE:	6/28/24
DWG FILE:	C8.0-Details
REF FILE:	7408-217
JOB NUMBER:	7408-217

DRAWING PHASE:

- OWNER REVIEW
- X AGENCY REVIEW
- BID DOCUMENT
- FOR CONSTRUCTION
- AS-BUILT DOCUMENT

REVISION DESCRIPTION:	NAME:	DATE:
RELEASED FOR REVIEW	ZPF	07/03/24

CORPORATE OFFICE
406 Technology Drive East
Suite A
Menomonie, WI 54751
Tel 715-232-8490

BRANCH OFFICE
2820 Raine Street
Suite 101
Hudson, WI 54016
Tel 715-381-5277

authconsulting.com

A·C/a
Auth·Consulting/associates
S&W Land Surveying a division of A·C/a

PROJECT:
PETERSON BUILDING & SITE IMPROVEMENTS
WITTSTOCK BUILDERS, LLC
VILLAGE OF SOMERSET, ST. CROIX COUNTY, WI

CIVIL/SITE DETAILS

SHEET NO.
C8.1

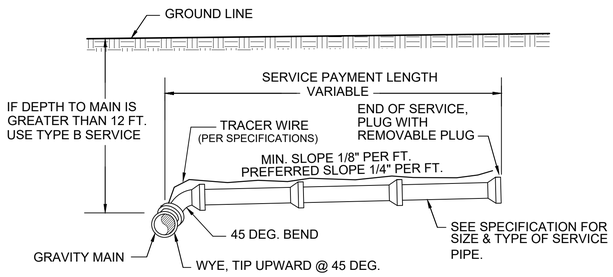

NOTE:
WHEREVER POSSIBLE END OF SERVICE TO BE AT 9 FT. DEPTH AT PROPERTY LINE OR AT BUILDING AS APPROPRIATE. WHERE 9 FT. DEPTH IS NOT POSSIBLE, DEPTH OF SERVICE TO BE AS DEEP AS POSSIBLE, CONSISTENT WITH THIS DETAIL.

NOTE:
CONTRACTOR SHALL FURNISH AND PLACE VERTICAL 2"x4" WOOD STAKE, SET 3' ABOVE GROUND & EXTENDED VERT. TO END OF SERVICE WHERE STUBBED OUT.

SANITARY SERVICE CONNECTION

N.T.S.

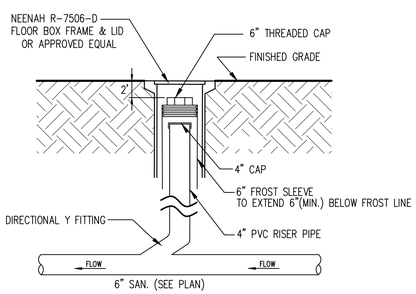

SANITARY SERVICE IN-LINE CLEANOUT WITH FROST SLEEVE

N.T.S.

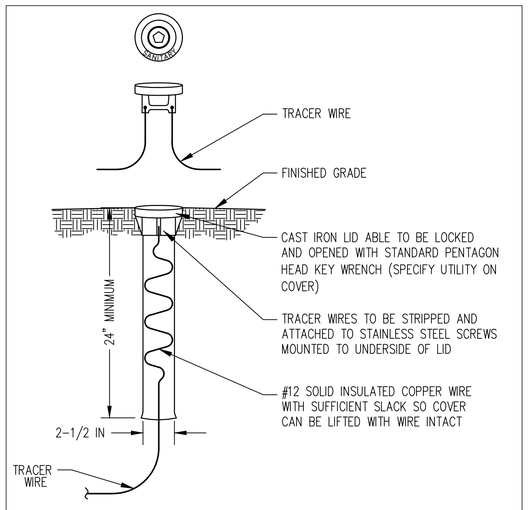

TRACER WIRE SIGNAL BOX

N.T.S.

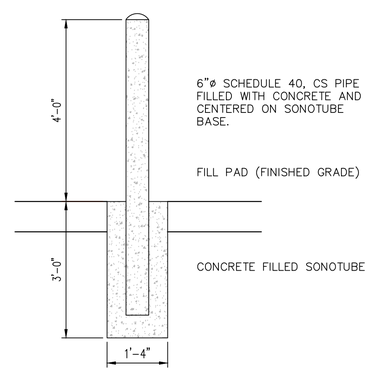

NOTE:
BOLLARDS TO BE PAINTED AS FOLLOWS:
BLAST: SSPC-SP6
PRIME: 2.5 MIL RED OXIDE
PAINT: 2.5 MIL SAFETY YELLOW WITH (3) STRIPS OF REFLECTIVE TAPE AT TOP OF POST

TYPICAL BOLLARD DETAIL

N.T.S.

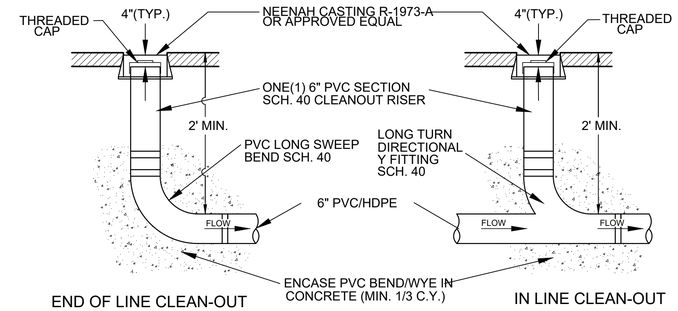

NOTES:
1. UTILIZE NEENAH R-1973-A CASTING, OR APPROVED EQUAL, SET 1/2" LOWER THAN ADJACENT FINISHED GRADE.
2. TERMINATE PVC 4" BELOW TOP OF CASTING.
3. CONTRACTOR TO VERIFY THAT 6" PVC PIPE DEPTH WILL ACCOMMODATE 8"(10") PVC/HDPE LONG SWEEP BEND/WYE FITTING AND CASTING.
4. ENCASE LONG SWEEP BEND OR LONG TURN WYE IN CONCRETE AS SHOWN.
5. INSTALL RISER ACCORDING TO APPLICABLE PLUMBING CODE.

TYPICAL STORM SEWER CLEAN-OUT DETAILS

N.T.S.

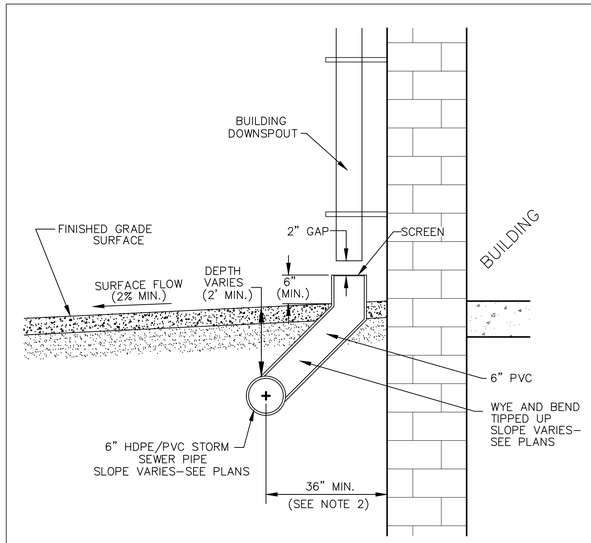

NOTES:
1. SEE STORM SEWER PLAN FOR DOWNSPOUT LOCATIONS. DOWNSPOUT LOCATIONS MAY VARY AND SHALL BE VERIFIED WITH BUILDING PLANS.
2. VERIFY SEPARATION OF 6" STORM SEWER WITH BUILDING FOUNDATION. 6" PVC STORM SEWER MAY NEED TO BE MODIFIED IF CONFLICTS EXIST WITH FOOTINGS.

BUILDING DOWNSPOUT CONNECTION DETAIL

N.T.S.

NAME:	DATE:
ZPF	07/03/24

REVISION DESCRIPTION: RELEASED FOR REVIEW

DRAWING PHASE:
- OWNER REVIEW
- X AGENCY REVIEW
- BID DOCUMENT
- FOR CONSTRUCTION
- AS-BUILT DOCUMENT

DRAWN BY: JVF
CHECKED BY: ZPF
DATE: 6/28/24
DWG FILE: C8.0-Details
REF FILE: 7408-217
JOB NUMBER: 7408-217

CORPORATE OFFICE
406 Technology Drive East
Suite A
Menomonie, WI 54751
Tel 715-232-8490

BRANCH OFFICE
2820 Raine Street
Suite 101
Hudson, WI 54016
Tel 715-381-5277

A·C/a
Auth·Consulting/associates
S&M Land Surveying a division of A·C/a
authconsulting.com

PROJECT:
PETERSON BUILDING & SITE IMPROVEMENTS
WITTSTOCK BUILDERS, LLC
VILLAGE OF SOMERSET, ST. CROIX COUNTY, WI

CIVIL/SITE DETAILS

SHEET NO.
C8.2

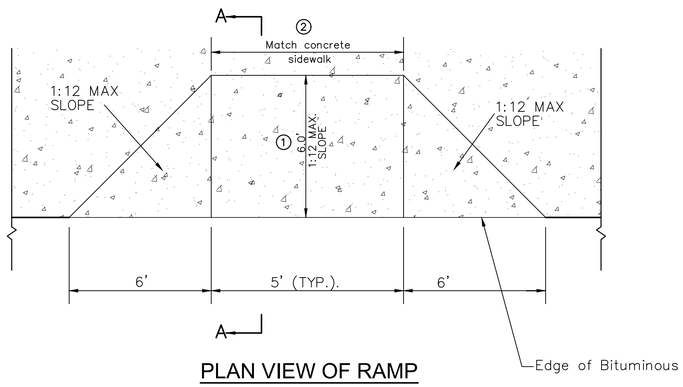

PLAN VIEW OF RAMP

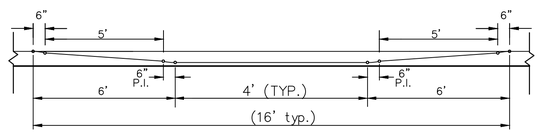

ELEVATION OF RAMP

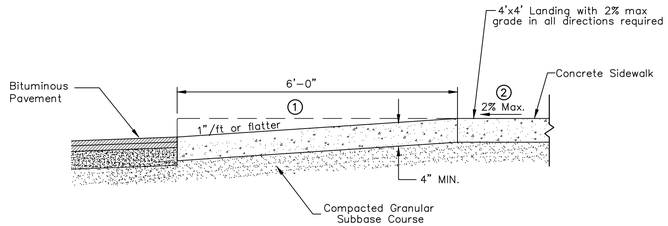

SECTION A-A

NOTES:

1. THE RAMP AREA WILL BE PAID FOR AS SQUARE FEET OF CONCRETE WALK.

① 6.0' DIMENSION MAY BE INCREASED WHERE FEASIBLE TO PROVIDE A FLATTER SLOPE.

② PROVIDE A PATH OF TRAVEL 4'-0" WIDE BY 4'-0" LONG BEHIND THE PEDESTRIAN RAMP. A RELATIVELY FLAT (2% MAXIMUM SLOPE) 4' x 4' LANDING IS REQUIRED.

PEDESTRIAN RAMP (CONCRETE AREA FOR BUILDING ENTRANCE)

N.T.S.

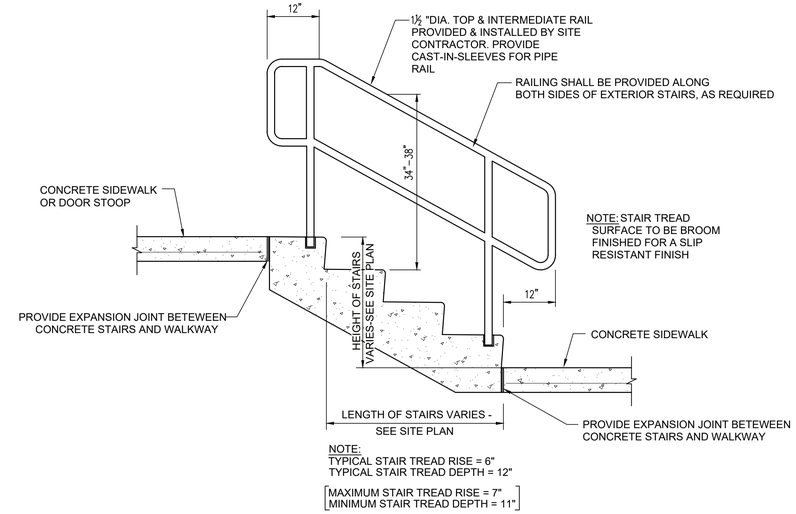

NOTE:
TYPICAL STAIR TREAD RISE = 6"
TYPICAL STAIR TREAD DEPTH = 12"

[MAXIMUM STAIR TREAD RISE = 7"
MINIMUM STAIR TREAD DEPTH = 11"]

NOTE: VERIFY WITH BUILDING STRUCTURAL PLANS FOR STAIR STRUCTURAL REQUIREMENTS AND DETAILS.

TYPICAL EXTERIOR STAIR CROSS SECTION

N.T.S.

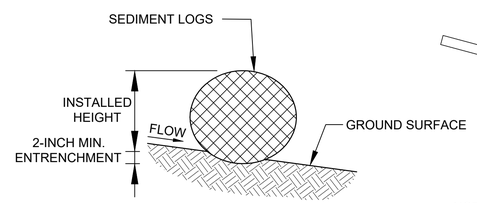

CROSS SECTION

N.T.S.

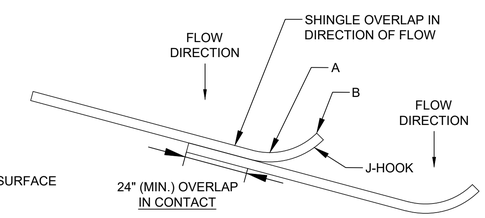

NOTES:

1. J-HOOKS SHALL BE INSTALLED SO THAT THE GROUND-PRODUCT INTERFACE ELEVATION AT LOCATION B IS HIGHER THAN THE TOP OF PRODUCT ELEVATION AT LOCATION A TO CREATE A WEIR AT POINT A.
2. J-HOOKS SHALL BE INSTALLED EVERY 2 VERTICAL FEET OF DROP ALONG THE LENGTH OF THE INSTALLATION.
3. STAKE OVERLAP AS REQUIRED BY MANUFACTURER.

SLOPING INSTALLATION

(PLAN VIEW) N.T.S.

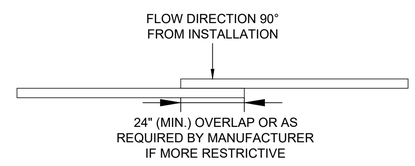

TYPICAL INSTALLATION

(PLAN VIEW) N.T.S.

INTERIM MANUFACTURED PERIMETER CONTROL AND SLOPE INTERRUPTION

N.T.S.

DRAWING PHASE:		DRAWN BY:	JVF
	OWNER REVIEW	CHECKED BY:	ZPF
X	AGENCY REVIEW	DATE:	6/28/24
	BID DOCUMENT	DWG FILE:	C8.0-Details
	FOR CONSTRUCTION	REF FILE:	7408-217
	AS-BUILT DOCUMENT	JOB NUMBER:	7408-217

	RELEASED FOR REVIEW	ZPF 07/03/24
	REVISION DESCRIPTION:	NAME: DATE:

CORPORATE OFFICE
406 Technology Drive East
Suite A
Menomonie, WI 54751
Tel 715-232-8490

BRANCH OFFICE
2820 Raboe Street
Suite 101
Hudson, WI 54016
Tel 715-381-5277

authconsulting.com

A·C/a
Auth•Consulting/associates
S&M Land Surveying a division of A·C/a

PROJECT:
PETERSON BUILDING & SITE IMPROVEMENTS
WITTSTOCK BUILDERS, LLC
VILLAGE OF SOMERSET, ST. CROIX COUNTY, WI

CIVIL/SITE DETAILS

SHEET NO.
C8.3

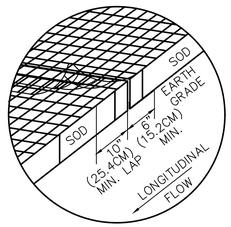

JUNCTION SLOT
SOD ONLY

DETAIL A
N.T.S.

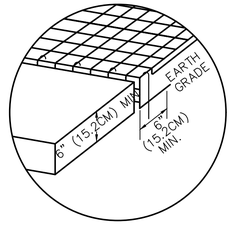

ANCHOR SLOT
AT BEGINNING AND END OF EROSION MAT

DETAIL B
N.T.S.

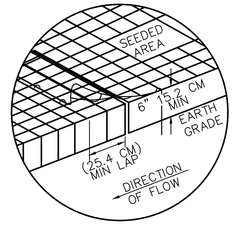

JUNCTION SLOT
SEED ONLY

DETAIL C
N.T.S.

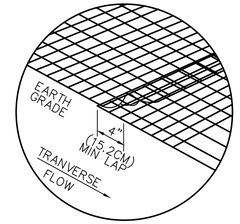

LAP JOINT
SEED AND SOD

DETAIL D
N.T.S.

GENERAL NOTES EROSION MAT

DETAILS OF CONSTRUCTION, MATERIALS AND WORKMANSHIP NOT SHOWN ON THIS DRAWING SHALL CONFORM TO THE PERTINENT REQUIREMENTS OF THE STANDARD SPECIFICATIONS AND THE APPLICABLE SPECIAL PROVISONS.

LAP JOINTS SHALL NOT BE PLACE IN THE BOTTOM OF V-SHAPED DITCHES.

JUNCTION SLOTS ON ADJACENT STRIPS OF MATTING SHALL BE STAGGERED A MINIMUM OF 4 FEET (1.219 m) APART.

EDGES OF THE EROSION MAT SHALL IMPRESSED IN THE SOIL.

EROSION MAT OVER SEEDING JUNCTION OR ANCHOR SLOTS SHALL BE AT MINIMUM INTERVALS OF 50 FEET.

STAPLE INSTALLATION AND PATTERNS SHALL COMPLY WITH EROSION MAT MANUFACTURER'S SPECIFICATIONS.

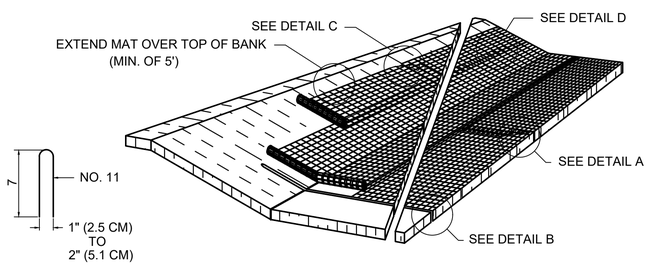

DETAIL OF TYPICAL STAPLE

* 6" (15.2 CM MIN. FOR LOOSE SOILS)
12" (30.5 CM MIN FOR LOOSE SOILS)
8" (20.3 CM MIN WHERE BOTH SOD AND MATS ARE BEING USED)

EROSION CONTROL MAT

N.T.S.

Seed Mix Number	Areas of Use	Species	Mixture Proportions %	Seeding Rate
20	Light, dry, well-drained, sandy, or gravelly soils and high cut & fill slopes	Kentucky Bluegrass Hard Fescue Tall Fescue Perennial Ryegrass	6 24 40 30	3 lbs/ 1000 sq.ft OR 130 lbs/acre

Note: See Wisconsin Department of Transportation standard specification section 630-seeding for additional information.

SEED MIXTURES

STANDARD INSTALLATION

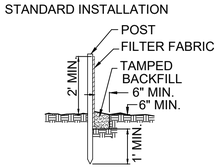

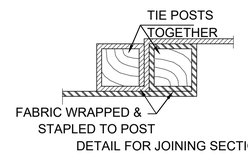

DETAIL FOR JOINING SECTIONS

NOTES:
1. MIN. 2"x2" POST TO BE SPACED AT A MAX. OF 5'.
2. FILTER FABRIC TO BE MIRAFI 100 OR EQUAL.
3. POSTS DAMAGED ON DRIVING SHALL BE REPLACED.
4. EROSION CONTROL SHALL BE MAINTAINED DAILY.

DETAIL FOR INSTALLATION OF EROSION FENCE

N.T.S.

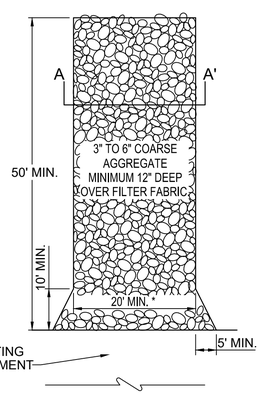

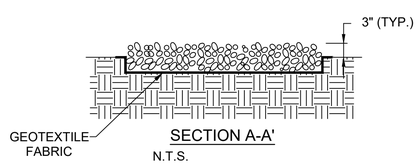

SECTION A-A'
N.T.S.

* MUST EXTEND FULL WIDTH OF INGRESS AND EGRESS OPENING.

NOTES:
1. TRACKING ENTRANCE SHALL BE INSPECTED DAILY. DEFICIENT AREAS SHALL BE REPAIRED OR REPLACED IMMMEDIATELY. THIS WORK SHALL BE INCIDENTIAL TO THE CONTRACT.
2. STONE SHALL BE REMOVED AND REPLACED WHEN SOIL FILLS OPENINGS AND/OR DIRECTED BY THE ENGINEER. THIS WORK SHALL BE INCIDENTIAL TO THE CONTRACT.
3. EXISTING PAVEMENT SHALL BE INSPECTED AND CLEANED AT LEAST DAILY. THIS WORK SHALL BE INCIDENTIAL TO THE CONTRACT.

VEHICULAR TRACKING ENTRANCE

N.T.S.

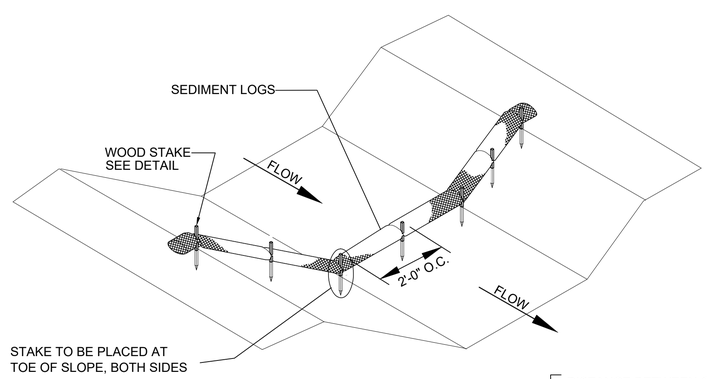

SEDIMENT LOGS

N.T.S.

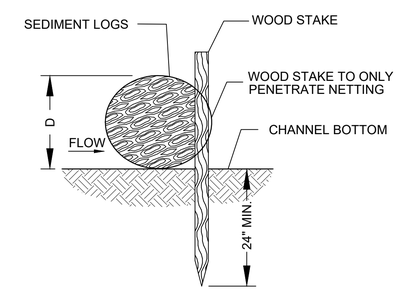

STAKE DETAILS

N.T.S.

[DISTANCE BETWEEN CHANNEL BOTTOM AND TOP OF INSTALLED SEDIMENT LOGS (D)(FT) / CHANNEL GRADIENT (%)] X 100 = SEDIMENT LOGS SPACING (FT)

RELEASED FOR REVIEW	ZPF	07/03/24
REVISION DESCRIPTION:	NAME:	DATE:

DRAWING PHASE:
- OWNER REVIEW
- X AGENCY REVIEW
- BID DOCUMENT
- FOR CONSTRUCTION
- AS-BUILT DOCUMENT

DRAWN BY: JVF
CHECKED BY: ZPF
DATE: 6/28/24
DWG FILE: C8.0-Details
REF FILE: 7408-217
JOB NUMBER: 7408-217

CORPORATE OFFICE
406 Technology Drive East
Suite A
Menomonie, WI 54751
Tel 715-232-8490

BRANCH OFFICE
2820 Raine Street
Suite 101
Hudson, WI 54016
Tel 715-381-5277

authconsulting.com

A·C/a
Auth·Consulting/associates
S&M Land Surveying a division of A·C/a

PROJECT:
PETERSON BUILDING & SITE IMPROVEMENTS
WITTSTOCK BUILDERS, LLC
VILLAGE OF SOMERSET, ST. CROIX COUNTY, WI

CIVIL/SITE DETAILS

SHEET NO.
C8.4

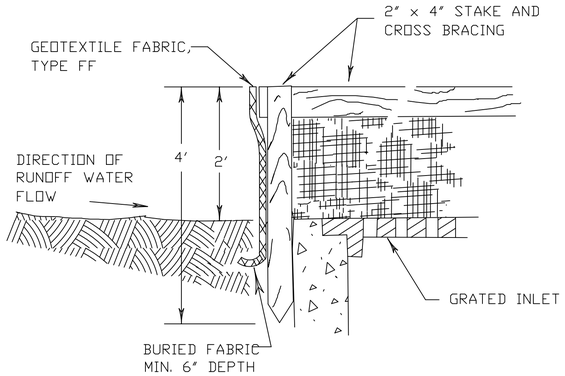

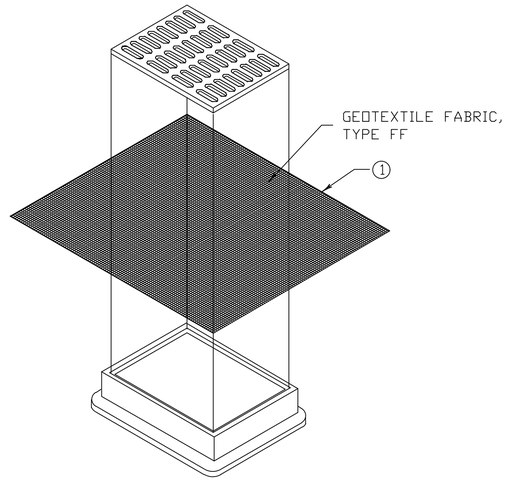

INLET PROTECTION, TYPE B
(WITHOUT CURB BOX)
(CAN BE INSTALLED IN ANY INLET WITHOUT A CURB BOX)

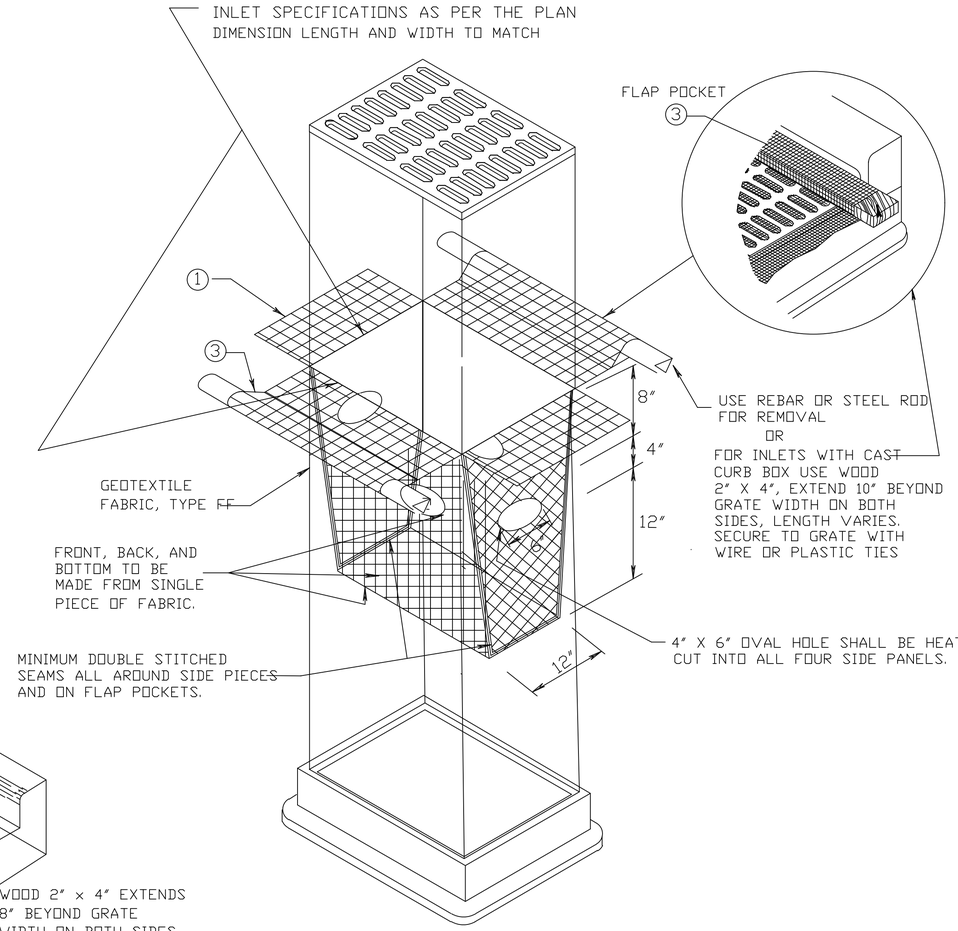

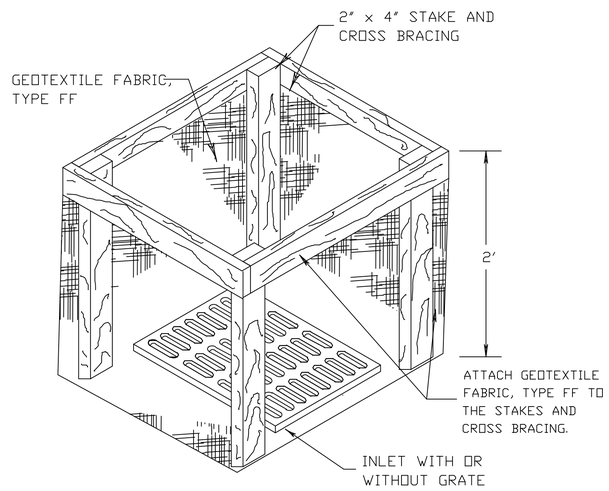

INLET PROTECTION, TYPE A

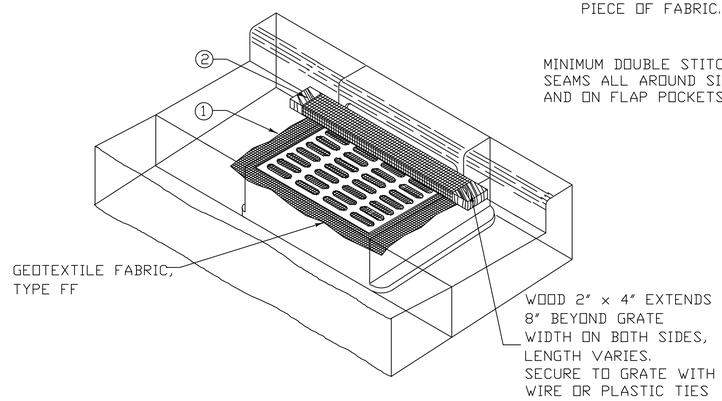

INLET PROTECTION, TYPE C (WITH CURB BOX)

INLET PROTECTION, TYPE D
(CAN BE INSTALLED IN ANY INLET TYPE WITH OR WITHOUT A CURB BOX AS PER NOTE 2)

GENERAL NOTES

INLET PROTECTION DEVICES SHALL BE MAINTAINED OR REPLACED AT THE DIRECTION OF THE ENGINEER.

MANUFACTURED ALTERNATIVES APPROVED AND LISTED ON THE DEPARTMENT'S EROSION CONTROL PRODUCT ACCEPTABILITY LIST MAY BE SUBSTITUTED.

WHEN REMOVING OR MAINTAINING INLET PROTECTION, CARE SHALL BE TAKEN SO THAT THE SEDIMENT TRAPPED ON THE GEOTEXTILE FABRIC DOES NOT FALL INTO THE INLET. ANY MATERIAL FALLING INTO THE INLET SHALL BE REMOVED IMMEDIATELY.

1 FINISHED SIZE, INCLUDING FLAP POCKETS WHERE REQUIRED, SHALL EXTEND A MINIMUM OF 10" AROUND THE PERIMETER TO FACILITATE MAINTENANCE OR REMOVAL.

2 FOR INLET PROTECTION, TYPE C (WITH CURB BOX), AN ADDITIONAL 18" OF FABRIC IS WRAPPED AROUND THE WOOD AND SECURED WITH STAPLES. THE WOOD SHALL NOT BLOCK THE ENTIRE HEIGHT OF THE CURB BOX OPENING.

3 FLAP POCKETS SHALL BE LARGE ENOUGH TO ACCEPT WOOD 2X4.

INSTALLATION NOTES

TYPE B & C

TRIM EXCESS FABRIC IN THE FLOW LINE TO WITHIN 3" OF THE GRATE.

THE CONTRACTOR SHALL DEMONSTRATE A METHOD OF MAINTENANCE, USING A SEWN FLAP, HAND HOLDS OR OTHER METHOD TO PREVENT ACCUMULATED SEDIMENT FROM ENTERING THE INLET.

TYPE D

DO NOT INSTALL INLET PROTECTION TYPE D IN INLETS SHALLOWER THAN 30", MEASURED FROM THE BOTTOM OF THE INLET TO THE TOP OF THE GRATE.

TRIM EXCESS FABRIC IN THE FLOW LINE TO WITHIN 3" OF THE GRATE.

THE INSTALLED BAG SHALL HAVE A MINIMUM SIDE CLEARANCE, BETWEEN THE INLET WALLS AND THE BAG, MEASURED AT THE BOTTOM OF THE OVERFLOW HOLES, OF 3". WHERE NECESSARY THE CONTRACTOR SHALL CINCH THE BAG, USING PLASTIC ZIP TIES, TO ACHIEVE THE 3" CLEARANCE. THE TIES SHALL BE PLACED AT A MAXIMUM OF 4" FROM THE BOTTOM OF THE BAG.

INLET PROTECTION DETAILS
N.T.S.

DRAWING PHASE:		DRAWN BY:	JVF
	OWNER REVIEW	CHECKED BY:	ZPF
X	AGENCY REVIEW	DATE:	6/28/24
	BID DOCUMENT	DWG FILE:	C8.0-Details
	FOR CONSTRUCTION	REF FILE:	7408-217
	AS-BUILT DOCUMENT	JOB NUMBER:	7408-217

	RELEASED FOR REVIEW	ZPF 07/03/24
	REVISION DESCRIPTION:	NAME: DATE:

CORPORATE OFFICE
406 Technology Drive East
Suite A
Menomonie, WI 54751
Tel 715-232-8490

BRANCH OFFICE
2820 Raine Street
Suite 101
Hudson, WI 54016
Tel 715-381-5277

A·C/a
Auth•Consulting/associates
S&M Land Surveying a division of A·C/a
authconsulting.com

PROJECT:
PETERSON BUILDING & SITE IMPROVEMENTS
WITTSTOCK BUILDERS, LLC
VILLAGE OF SOMERSET, ST. CROIX COUNTY, WI

CIVIL/SITE DETAILS

SHEET NO.
C8.5

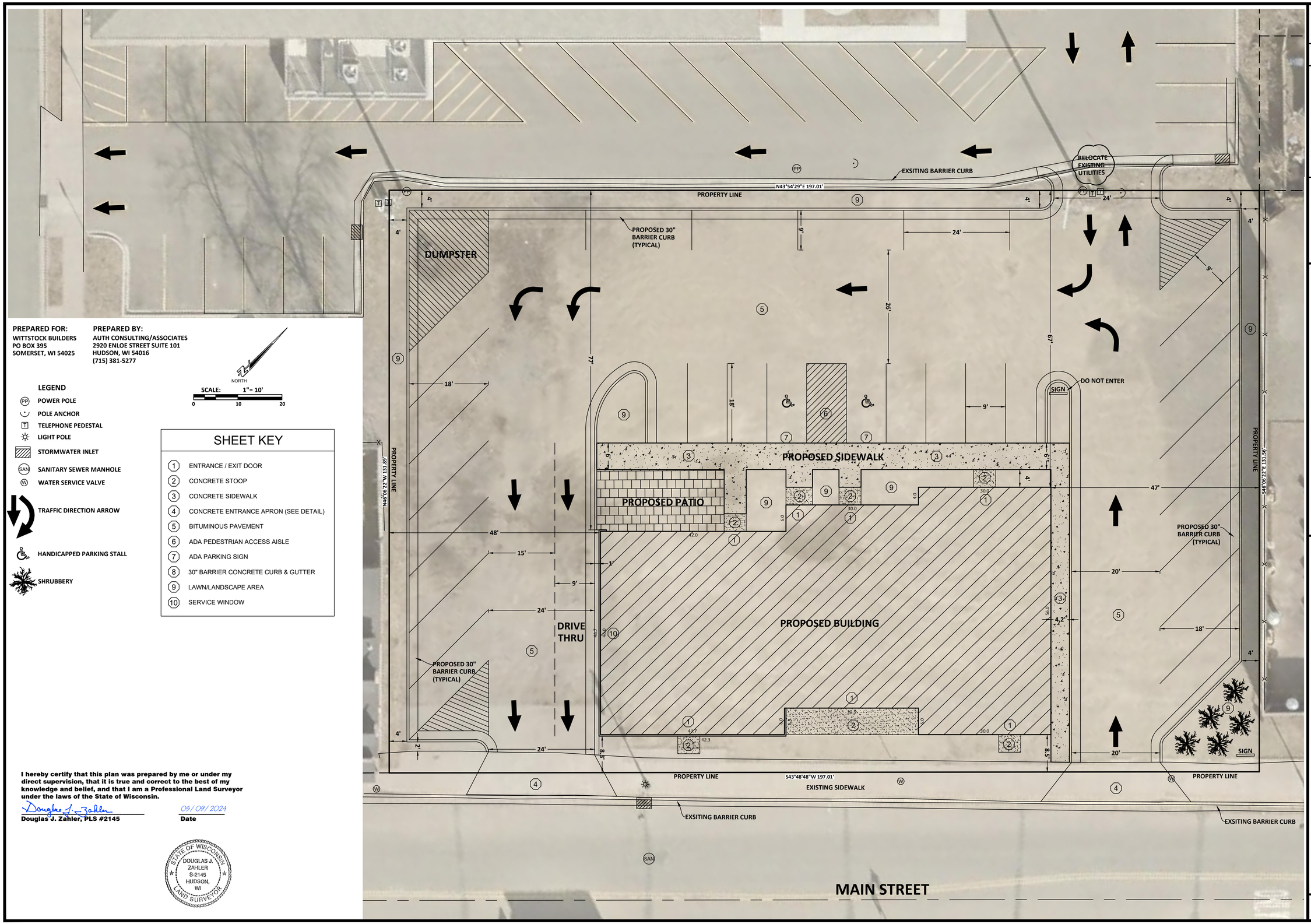

PREPARED FOR:
WITTSTOCK BUILDERS
PO BOX 395
SOMERSET, WI 54025

PREPARED BY:
AUTH CONSULTING/ASSOCIATES
2920 ENLOE STREET SUITE 101
HUDSON, WI 54016
(715) 381-5277

NORTH

SCALE: 1"= 10'
0 10 20

LEGEND

- POWER POLE
- POLE ANCHOR
- TELEPHONE PEDESTAL
- LIGHT POLE
- STORMWATER INLET
- SANITARY SEWER MANHOLE
- WATER SERVICE VALVE
- TRAFFIC DIRECTION ARROW
- HANDICAPPED PARKING STALL
- SHRUBBERY

SHEET KEY

1. ENTRANCE / EXIT DOOR
2. CONCRETE STOOP
3. CONCRETE SIDEWALK
4. CONCRETE ENTRANCE APRON (SEE DETAIL)
5. BITUMINOUS PAVEMENT
6. ADA PEDESTRIAN ACCESS AISLE
7. ADA PARKING SIGN
8. 30" BARRIER CONCRETE CURB & GUTTER
9. LAWN/LANDSCAPE AREA
10. SERVICE WINDOW

I hereby certify that this plan was prepared by me or under my direct supervision, that it is true and correct to the best of my knowledge and belief, and that I am a Professional Land Surveyor under the laws of the State of Wisconsin.

Douglas J. Zahler — 05/09/2024

Douglas J. Zahler, PLS #2145 — **Date**

STATE OF WISCONSIN
DOUGLAS J. ZAHLER
S-2145
HUDSON, WI
LAND SURVEYOR

REVISION DESCRIPTION:	NAME:	DATE:

DRAWN BY: DJZ
CHECKED BY: ZF
DATE: 5/4/24
DWG FILE: 7408-217
REF FILE:
JOB NUMBER: 7408-217

CORPORATE OFFICE
406 Technology Drive East
Suite A
Menomonie, WI 54751
Tel 715-232-8490
Fax 715-232-8492
menomonie@authconsulting.com

BRANCH OFFICE
2920 Enloe Street
Suite 101
Hudson, WI 54016
Tel 715-381-5277
Fax 715-381-5338
hudson@authconsulting.com

A·C/a
Auth·Consulting/associates
S&N Land Surveying

PROJECT:
WITTSTOCK BUILDERS
PETERSON BUILDING
VILLAGE OF SOMERSET, ST. CROIX COUNTY, WISCONSIN

SITE PLAN - AERIAL OVERLAY

SHEET NO.

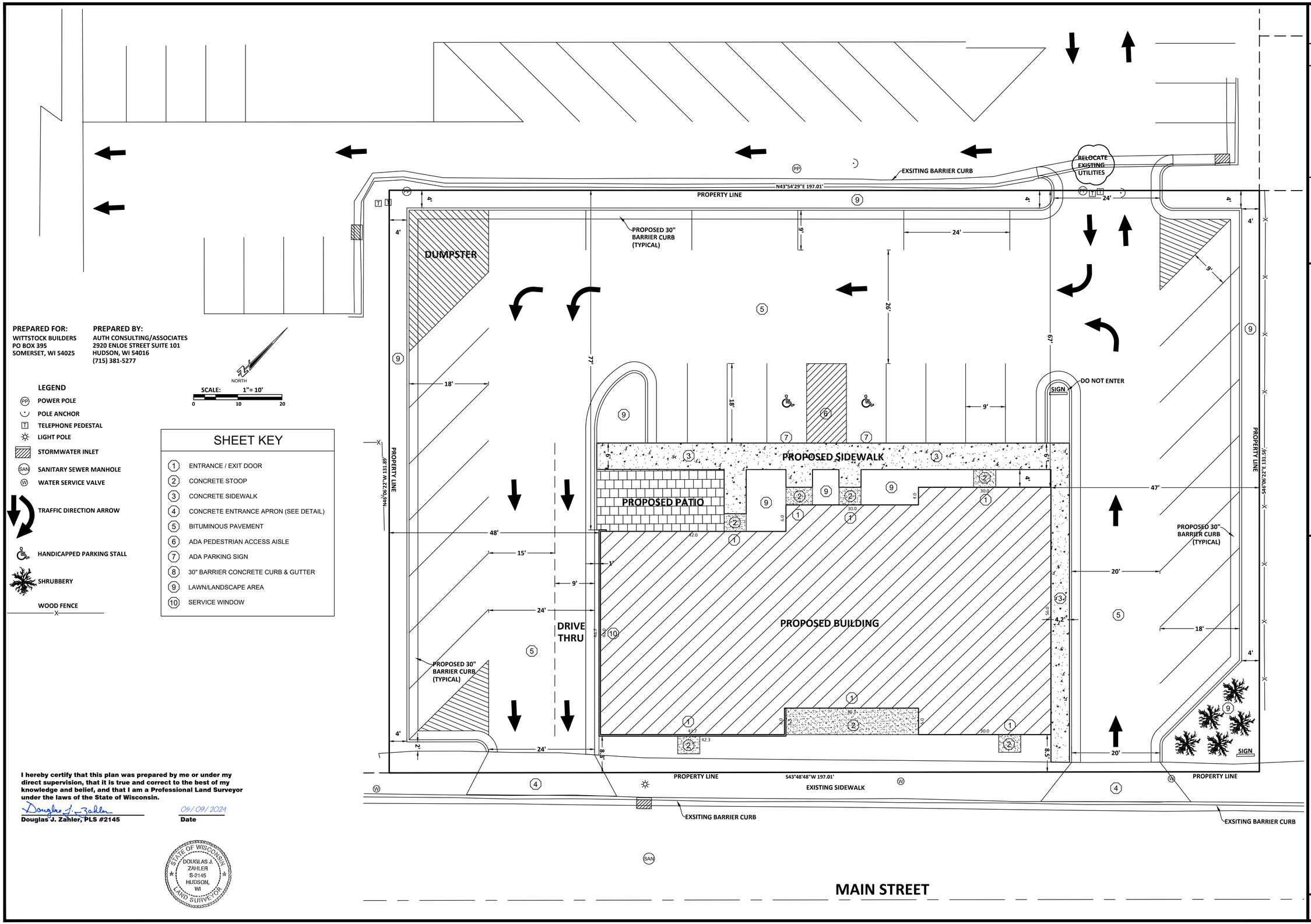

PREPARED FOR:
WITTSTOCK BUILDERS
PO BOX 395
SOMERSET, WI 54025

PREPARED BY:
AUTH CONSULTING/ASSOCIATES
2920 ENLOE STREET SUITE 101
HUDSON, WI 54016
(715) 381-5277

LEGEND

- POWER POLE
- POLE ANCHOR
- TELEPHONE PEDESTAL
- LIGHT POLE
- STORMWATER INLET
- SANITARY SEWER MANHOLE
- WATER SERVICE VALVE
- TRAFFIC DIRECTION ARROW
- HANDICAPPED PARKING STALL
- SHRUBBERY
- WOOD FENCE

SHEET KEY

1. ENTRANCE / EXIT DOOR
2. CONCRETE STOOP
3. CONCRETE SIDEWALK
4. CONCRETE ENTRANCE APRON (SEE DETAIL)
5. BITUMINOUS PAVEMENT
6. ADA PEDESTRIAN ACCESS AISLE
7. ADA PARKING SIGN
8. 30" BARRIER CONCRETE CURB & GUTTER
9. LAWN/LANDSCAPE AREA
10. SERVICE WINDOW

I hereby certify that this plan was prepared by me or under my direct supervision, that it is true and correct to the best of my knowledge and belief, and that I am a Professional Land Surveyor under the laws of the State of Wisconsin.

Douglas J. Zahler — 05/09/2024

Douglas J. Zahler, PLS #2145 — **Date**

STATE OF WISCONSIN — DOUGLAS J. ZAHLER S-2145 HUDSON, WI — LAND SURVEYOR

REVISION DESCRIPTION:	NAME:	DATE:

DRAWN BY: DJZ
CHECKED BY: ZF
DATE: 5/4/24
DWG FILE: 7408-217
REF FILE:
JOB NUMBER: 7408-217

CORPORATE OFFICE
406 Technology Drive East
Suite A
Menomonie, WI 54751
Tel 715-232-8490
Fax 715-232-8492
menomonie@authconsulting.com

BRANCH OFFICE
2920 Enloe Street
Suite 101
Hudson, WI 54016
Tel 715-381-5277
Fax 715-381-5338
hudson@authconsulting.com

Auth•Consulting/associates
S&N Land Surveying

PROJECT:
WITTSTOCK BUILDERS
PETERSON BUILDING
VILLAGE OF SOMERSET, ST. CROIX COUNTY, WISCONSIN

SITE PLAN

SHEET NO.

Somerset Fire/Rescue

from the office of Chief Belisle

July 1st, 2024

Dear Board Members –

This is the update for June 2024. This month we responded to 49 calls for service. The breakdown is as follows: 25 calls in the Village consisting of 24 medicals and 1 fire/rescue call; 15 in the Township consisting of 12 medicals and 3 fire/rescue calls; and 9 auto aid calls, 8 in St. Joe and 1 in Star Prairie. This brings us to a total of 258 runs for the year compared to 197 for the same time in 2023.

The Tahoe should be listed soon on Wisconsin Surplus website. I've asked that it is open until July 19th for bidding. Once sold these funds will go back in to the departments fundraising account where the money was withdrawn for the purchase. Our tender is still showing delivery in late July/early August with no change in price.

Pea Soup days is in the books. We raised just over $5,000 at the breakfast and another $800 after costs for the mailing we sent out. We haven't met with the Pea Soup Days committee at time of this update, so it is unknown how much we were able to raise at the festival itself.

We are currently operating with 25 members of which 17 are full members, 5 are probationary, 1 is a part time employee, 1 is a High School Cadet and 1 is an honorary member. We are still below staffing for what we would like to see and we currently are working with our recruitment committee to attempt to recruit from our growing community. As always you are more than welcome to stop in and say hi at the station when you see someone there. We welcome visitors and are more than willing to give you a tour and show you our trucks and equipment!

Sincerely,

Travis Belisle

Travis Belisle - Chief
Somerset Fire/Rescue

748 Hwy 35
Somerset, WI 54025
Station (715)247-5364 Fax (715)247-3194

July 9, 2024

Andrea Otto
Treasurer/Deputy Clerk
Village of Somerset
110 Spring Street
PO Box 356
Somerset, WI 54025

RE: Proposal for a Long-Term Financial Management Plan

Dear Andrea,

On behalf of Ehlers, I am pleased to present this proposal to undertake customized long-term financial planning for the Village of Somerset. We are grateful for the opportunity to work with the Village and hope this proposal demonstrates our team's collective commitment and qualifications to deliver dynamic and practical financing planning – and to surpass your expectations for quality and value. We would be honored to serve you.

We understand the Village completed a facilities condition assessment and space needs study this year and would like to develop a long-term Financial Management Plan ("FMP") as a tool to evaluate the impact of facility needs, and other upcoming capital projects on both the Village's finances and property taxes. In addition, the FMP will be a vehicle to determine appropriate funding sources and project timing. Ehlers can assist the Village in evaluating the financial impact of various options for the capital projects and prioritizing them along with other Village needs.

The FMP will provide a strategy for funding the Village's priority projects and operations. It will let us ask critical questions. For example, what if we delay a project or other planned equipment purchases? Will the new tax base of future development offset the costs of paying for the infrastructure? The FMP provides a tool to explore all these questions and develop a comprehensive funding strategy for the long-term operating and capital needs of the Village.

For over 60 years, Ehlers has helped municipal clients build strong and vibrant communities through financial planning, debt issuance and management, and economic development consulting services. **In the last five years alone, our firm has completed 100+ long-term financial plans for various sized communities.** We appreciate the opportunity to work with the Village of Somerset to address your long-term funding needs.

Financial Management Plan

A Financial Management Plan ("FMP") is a 10-year long-term operating budget and capital improvement plan with a funding strategy developed through facilitated discussions with staff and Village Board. It will guide the Village's financial future and determine how the Village can fund its capital needs.

Ehlers will build a customized Excel model for the Village of Somerset with cashflow projections for each fund that roll-up into a summary forecast.

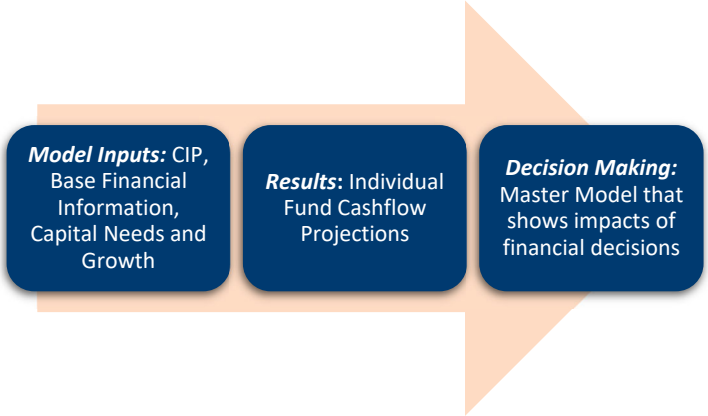

We preliminarily propose including the following funds in the study:

- General Fund
- Debt Service Fund
- Apple River Bridge Improvements Fund
- Other Capital Improvements Fund
- Water Fund
- Sewer Fund

As part of developing the FMP, Ehlers will engage the Board in facilitated discussions to describe the projections and develop consensus. By understanding the financial impacts of decisions, the Board can establish spending priorities and develop consensus about an acceptable level of property taxes and other revenues. The FMP will provide the Board and the public with an understanding how today's decisions will affect constituents in the future.

Staff and Board Meetings for the FMP

Ehlers' Scope of Work anticipates up to two meetings with staff and two meetings with the Village Board. During the initial staff meeting, we will review the first draft and discuss policy issues. The initial draft will show financial impacts of all operations and capital improvements. After staff is comfortable with the projections and assumptions, we start the conversation with the Board. At the first workshop with the Board, we will show the financial impact of accomplishing all the Village's goals and determine if priorities need to be set between competing funding demands. We also explore options for additional revenues.

Based on staff and Board direction, we then refine the FMP with up to two scenarios that alter the timing of capital projects, new or increased operational expenses and alternative revenue sources. After soliciting additional feedback from staff, we will develop a fiscal strategy to present to the Board at a second meeting or work session.

Financial Management Plan Deliverables

The FMP will deliver an achievable, comprehensive financial plan that has been reviewed by and agreed upon by the Village Board. The FMP includes:

- Annual projected budget numbers for each of the next 10 years
- Inclusion of all capital improvements identified by the Village
- Inclusion of additional staffing and related equipment (if applicable)
- Expected changes in the tax base
- Facilitated Board discussions to reach consensus on prioritization of projects and potential new revenues
- Presentation materials for Board and Village use

Most importantly, the FMP process will result in a feasible funding plan for the Village's operations and capital projects, as further described in Appendix A.

Project Team

The Project Team for the FMP will consist of Sean Lentz, Jeanne Vogt and Kristina Norquist. Sean will serve as Project Manager and attend the Board meetings. Jeanne and Kristina will perform the numerical analysis.

Project Schedule

The FMP can be completed within three months, depending on the availability of capital improvement plans, staffing plans and timing of Board meeting schedules.

Proposed Cost

Ehlers proposes to complete the FMP for the not-to-exceed cost of $18,525. We propose that the project will be billed hourly at the hourly rate of $285, for actual hours worked so that the final cost may be less. The final cost of the FMP may be financed along with a capital project.

Ehlers is committed to delivering, and showing value, in our work.

Thank you for engaging with us in your financial planning discussion. We appreciate your consideration and look forward to discussing how Ehlers can best serve the Village.

Sincerely,

Sean Lentz
Senior Municipal Advisor
(651) 697-8596

Josh Low
Associate Municipal Advisor
(651) 697-8509

Appendix A
Scope of Work: Financial Management Plan

The Financial Management Plan ("FMP") will be completed in the following steps.

Step 1. **Review Village's current financial position, policies and practices**.

Step 2. **Aggregate and outline all future capital needs and program requests** from Village staff and consultants. A comprehensive list of major capital items and operational needs will be developed with the staff leadership.

Step 3. **Assist in identifying other policy issues to be discussed and establish a framework for such discussion.**

Step 4. **Evaluate the impact of any tax base changes.** Potential changes in the tax base due to growth, redevelopment or anticipated business closures will be included in the FMP model, as well as expiring TID Districts (if applicable).

Step 5. **Create the FMP Base Model** that shows the impact of including all capital requests. The Model will follow the Village's financial statements and show projected ending cash balances for each fund for each of the next ten years.

Step 6. **Analyze options** to best meet the Village's needs. Options might include varying the timing of capital projects, changing capital funding policies, or modeling alternative revenue sources. The financial impact, including determining bond rating impact(s), of up to two scenarios will be shown.

Step 7. **Prepare an achievable, comprehensive financial plan** that helps the Village fund capital and operating priorities and builds Board consensus.

ArcGIS Web Map

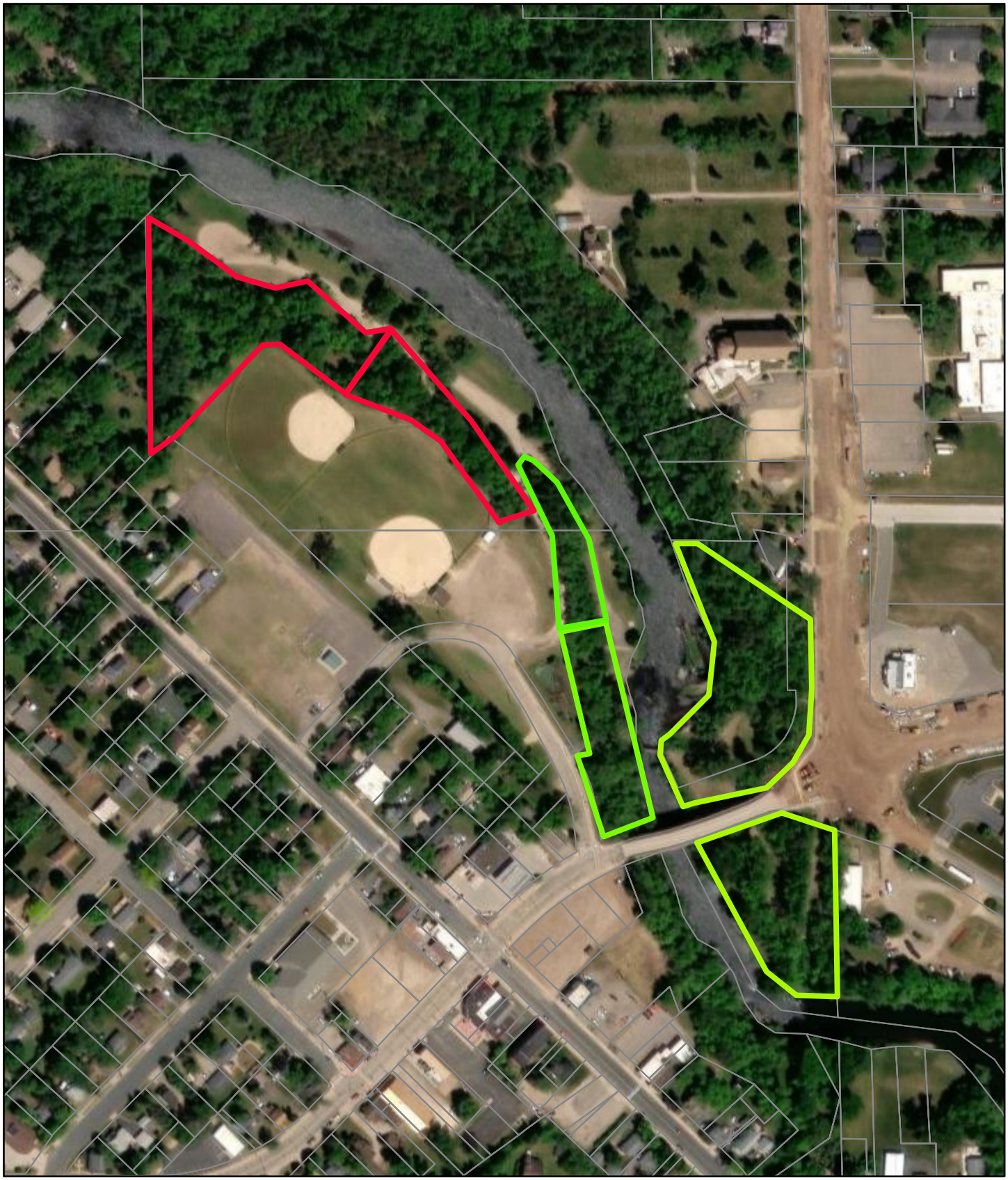

6/19/2024, 3:43:56 PM

1:4,514

0 0.03 0.06 0.11 mi

0 0.04 0.09 0.17 km

Parcels

Owners

Maxar

ArcGIS Web AppBuilder

Maxar |

ESTIMATE

White Pine Land Management LLC
651 170th Ave
Somerset, WI 54025

gbelisle@whitepinelm.com
+1 (715) 417-4580
www.whitepinelm.com

Bill to
Robert Gunther
Village of Somerset
Somerset, WI 54025

Ship to
Robert Gunther
Village of Somerset
Somerset, WI 54025

Estimate details
Estimate no.: 1078
Estimate date: 07/09/2024

#	Date	Product or service	Description	Qty	Rate	Amount
1.	07/09/2024	**Mobilization**		1	$200.00	$200.00
2.	07/09/2024	**Brush Removal / Hour**	Clear areas by river in Village Park accessible with skid	15	$250.00	$3,750.00

Subtotal	$3,950.00
Sales tax (5.50%)	$217.25
Total	**$4,167.25**

Jack and His Goats Property Proposal

$300 reservation fee required upon acceptance in order to secure a place on our schedule
Remaining balance due upon delivery of goats

Equipment setup and maintenance

- Establishment and removal of electrified perimeter fence
- Signage of electric fence
- Setup and removal of drinking water and mineral PVC pipe.
- Delivery and removal of goats and supplies.

Acreage cleared

- Goats will graze until most of the leaves are gone up to 6 feet in the air

3-4 year proposal

- For this project to be effective it is recommended that we do several treatments over the course of 3-4 years, with treatment schedules varying depending upon sporadic evaluation of vegetable regrowth with 2 treatments a year depending on condition.

Disclaimer

The goal of this project is to control undesirable trees/brush/plants species throughout the project site by prescribed/target grazing using live goats.

It is understood that flexibility is allowed for effective prescribed/target grazing which may take less (or more) time. Adjustments to the grazing time frame may be made through verbal consultation with the Property Owner and Contractor.

A grazing event is described as one full pass through each paddock of the project site, where goats eat/defoliate at least 80% to 90% of accessible target vegetation.

Contractor is not liable for any tree/brush/plant consumed by goats within the project site if said tree/brush/plant is not intended to be kept by Owner. If said tree/brush/plant is to be kept or grazed it is up to the owner to distinguish the species and inform the Contractor. If a tree/brush/plant is identified by the Owner/Contractor will determine a best plan based on the circumstances of the location to protect such tree/brush/plant and will be noted in the estimate/invoice.

Owners may not contribute any more brush or yard waste to the project site once the Contractor has established a bid on the same project (this includes cutting trees within the project site). Owner or persons under Owner's direction or control may not enter the fenced area unless under specified reason from the Contractor: i.e. Water fill, animal issue, fence issue.

The undersigned has examined the Contract Documents, consisting of the Proposal Form, technical specifications, drawings, maps, addenda, and other documents listed in the Proposal Form, and is familiar with the site location of the

project, the nature of the Work and local conditions affecting the cost of the Work.

The term “Work” is defined as the services and construction required by the Contract Documents, and includes all labor, materials, equipment, and services provided or to be provided by the Contractor to fulfill the Contractor’s obligations.

A Claim is a demand or assertion by one of the parties seeking, as a matter of right, adjustment or interpretation of Contract terms, payment or money, extension of time or other relief with respect to the terms of the Contract.

The term “Claim” also includes other disputes and matters in question between the Owner and Contractor arising out of or relating to the Contract. Claims must be initiated by written notice. The responsibility to substantiate the Claim shall rest with the party making the claim.

The Owner may, by written notice to the Contractor, terminate this Contract in whole or in part at any time, for convenience or because of the failure of the Contractor to fulfill its contractual obligations. To the fullest extent permitted by law, the Contractor shall indemnify and hold harmless Owner and its representatives, agents, and employees from all claims, damages, losses and expenses, including but not limited to reasonable attorney’s fees, which are attributable to or are the result of negligent or otherwise wrongful acts or omission, including breach of a specific contractual duty, of the Contractor or the Contractor’s Subcontractors, agents, employees, delegates, suppliers, or anyone acting on behalf of the Contractor. However the Owner shall be held responsible for damages, loss or expenses for any negligent act or occurrence which was a direct or partial control of the Owners actions or affiliates associated with the Owner.

Contractor owns portable electric fencing materials and batteries/solar power necessary for establishing paddocks for rotational grazing, transports goats to and from the site, and is responsible for full set-up and maintenance of portable fencing.

The Owner is not liable for the loss or damage of prescribed grazing equipment or goats. The Contractor should be aware that the grazing site in this bid could have coyotes and other wildlife near it. The Owner is not liable for medical expenses or goat replacement shoulder injury or death due to wild animal attack. Also, the Owner cannot be held responsible for damage or injury caused by outside public, damage or injury caused to goats that might escape the project area. This excludes negligence on the Owner's part from personal pets or other owner controlled incidents in which equipment and/or goats are damaged or lost as well as any outside injury to persons or damage to properties considered under the Owners control.

This agreement is for the property at Village Park in Somerset WI., that Brandon Krohn and I discussed on June 27, 2024.

- The goats will be grazing 1.1 acres next to the river up to the bridge.
- The river will be one boundary
- We will bring panels for the southern boundary that is rock faced
- The rest will be fenced with electrified netting

Proposal #1: Graze one time this fall. $1,300

Proposal #2: Graze one time this fall and one time in the spring of 2025. $2,600

To accept proposal #2 please sign, date and return

_____ **Date** _____

To accept proposal #1 please sign, date and return

_____ **Date**_____

Village of Somerset

MEMO

To: Village Trustees 7/11/24

From: Tasia Berger, Village Clerk

RE: Regular Office Hours

Staff is requesting the following changes for regular office hours:

Office Hours: Monday-Thursday 8:00 a.m. – 4:00 p.m., Friday 8:00 a.m. – 12:00 p.m.
Previous regular office hours: Monday-Thursday 9:00 a.m.-4:30 p.m., Friday 9:00 a.m. – 1:00 p.m.

As expected, we have experienced a consistent, increased trend of residents calling and/or stopping by Village Hall for assistance between the hours of 8:00-9:00 a.m. Additionally, staff have also observed minimal traffic after 4 p.m.

After further discussion amongst staff, we believe it would benefit the residents to have regular office hours of 8:00 a.m.-4:00 p.m., Monday-Thursday and 8:00 a.m.-12:00 p.m. on Fridays. We are requesting these regular hours run from September 1-May 31.

Sec. 13-1-140. - Standards and restrictions for accessory uses or structures.

(a) *Principal Use to be Present.* An accessory use or structure in any zoning district shall not be established prior to the principal use or structure being present or under construction. Any accessory use or structure shall conform to the applicable regulations of the district in which it is located, except as specifically otherwise provided.

(b) *Placement Restrictions—Residential District.* An accessory use or structure in a residential district may be established subject to the following regulations:

(1) *Accessory Building Number Limits.* In any residential district, in addition to the principal building, a detached garage or attached garage and one (1) additional accessory building may be placed on a lot.

(2) *Accessory Building Size Limits.* No attached accessory building or structure shall exceed the height of the principal building or structure.

(3) *Attached Accessory Buildings.* All accessory buildings which are attached to the principal building shall comply with the yard requirements of the principal building.

(4) *Detached Accessory Buildings.* No accessory structure shall extend closer to a street than the principal structure located on the lot. Accessory uses and structures which require a reduction in yard requirements may be located in the rear yard only. Accessory uses and structures shall not be closer than ten (10) feet to the principal structure; however, if the load-bearing walls of each structure have at least a one (1) hour fire rating, the Building Inspector may permit a building separation of only five (5) feet. Accessory structures in business and industrial districts shall not exceed twenty-two (22) feet in height and accessory structures shall not exceed fifteen (15) feet in all other districts. Accessory uses and structures placed in the rear yard of any district shall not occupy more than twenty percent (20%) of the rear yard area, or shall not exceed ~~four hundred (400)~~ nine hundred (900) square feet, whichever is more restrictive; and shall not be closer than three (3) feet to any lot line, nor closer than five (5) feet to an alley line.

(5) *Garages.* Garages, whether attached or detached, shall comply with the dimensional requirements of the zoning district in which located. Garages shall comply with the setback requirements applicable for principal structures on the lot.

(6) *Detached Garages.* Detached garages are permitted in the rear yard and side yards only. They shall not exceed the area requirements found in the standards for each zoning district and the roof pitch shall not exceed the steepest pitch of the principal structure. The total lot coverage shall not exceed the total allowed as set forth in the zoning district where the garage will be located. Total lot coverage shall include all buildings located on the lot.

(c)

Use Restrictions—Residential District. Accessory uses or structures in residential districts shall not involve the conduct of any business, trade or industry except for home occupations as defined and authorized herein and shall not be occupied as a dwelling unit.

(d) *Use Restrictions—Nonresidential Districts.* An accessory use or structure in a business or manufacturing district may be established in the rear yard or side yard and shall have setbacks as prescribed in each zoning district.

(e) *Reversed Corner Lots.* When an accessory structure is located on the rear of a reversed corner lot, it shall not be located beyond the front yard required on the adjacent interior lot to the rear, nor nearer than five (5) feet to the side line of the adjacent structure.

(f) *Landscaping and Decorative Uses.* Accessory structures and vegetation used for landscaping and decorating may be placed in any required yard area. Permitted structures and vegetation include flag poles, ornamental light standards, lawn furniture, sun dials, bird baths, trees, shrubs and flowers and gardens.

(g) *Temporary Uses.* Temporary accessory uses such as real estate sale field offices or shelters for materials and equipment being used in the construction of the permanent structure may be permitted by the Zoning Administrator, and shall be removed within thirty (30) days of occupancy of the project.

(h) *Garages in Embankments in Front Yards.* Where the mean natural grade of a front yard is more than eight (8) feet above the curb level, a private garage may be erected within the front yard, following approval by the Village Board, provided as follows:

(1) That such private garage shall be located not less than five (5) feet from the front lot line;

(2) That the floor level of such private garage shall be not more than one (1) foot above the curb level; and

(3) That at least one-half (½) the height of such private garage shall be below the mean grade of the front yard.

(i) *Outdoor Lighting.* Outdoor lighting installations shall not be permitted closer than three (3) feet to an abutting property line and, where not specifically otherwise regulated, shall not exceed fifteen (15) feet in height and shall be adequately shielded or hooded so that no excessive glare or illumination is cast upon the adjoining properties.

(j) *Lawn Accessories.* Walks, drives, paved terraces and purely decorative garden accessories such as pools, fountains, statuary, flag poles, etc., shall be permitted in setback areas but not closer than three (3) feet to an abutting property line other than a street line.

(k) *Retaining Walls.* Retaining walls may be permitted anywhere on the lot, provided, however, that no individual wall shall exceed six (6) feet in height, and a terrace of at least three (3) feet in width shall be provided between any series of such walls and provided further that along a street frontage no such wall shall be closer than three (3) feet to the property line.

Sec. 15-4-4. - Minimum standards for dwellings and accessory structures.

(a) *Minimum Standards.* No person shall occupy as owner-occupant or shall let or hold out to another for occupancy, any dwelling or family unit, for the purpose of living therein, or own or be in control of any vacant dwelling or dwelling unit which is not safe, clean, sanitary, and fit for human occupancy, and which does not comply with the particular requirements of the following Subsections.

(b) *Foundations, Exterior Walls and Roofs.* No person shall be an owner or occupant of any premises which does not comply with the following requirement:

(1) Every exterior wall shall be free of deterioration, holes, breaks, loose or rotting board or timbers.

(2) Structures that require paint or stain should have paint or stain applied at regular intervals to exterior building surfaces. When the building has more than thirty percent (30%) deterioration of its finished surface on any wall, that wall shall be painted or stained. Such painting and staining shall be completed within ninety (90) days from the date of the first application.

(3) All cornices, moldings, lintels, sills, oriel windows, and similar projections shall be kept in good repair and free from cracks and defects which make them hazardous or unsightly.

(4) Roof surfaces shall be tight and have no defects which admit water. All roof drainage systems shall be secured and hung properly.

(5) Chimneys, antennas, air vents, and other similar projections shall be structurally sound and in good repair. Such projections shall be secured properly, where applicable, to an exterior wall or exterior roof.

(c) *Grading and Drainage of Lots.* Every yard, court, vent passageway, driveway, and other portion of the lot on which the building stands shall be graded and drained so as to prevent the accumulation of water on any such surface or on adjacent property. Driveways shall be maintained in good repair.

(d) *Accessory Structures.* All accessory structures shall be maintained in a state of good repair and vertical alignment. All exterior appurtenances or accessory structures which serve no useful purpose and are in a deteriorated or dilapidated condition, which are not economically repairable, shall be removed. Such structures include, but shall not be limited to ~~porches, terraces, entrance platforms,~~ detached garages, ~~sidewalks, driveways,~~ carports, ~~walls, fences~~ and miscellaneous sheds.

(e) *Abandoned Dwellings.* The owner of any abandoned dwelling shall:

(1) Cause all services and utilities to be disconnected from or discontinued to said dwelling;

(2) Lock all exterior doors and windows of said dwelling;

(3) Maintain such dwelling so that its foundation, floors, windows, walls, doors, ceilings, roof, porches and stairs shall be reasonably weathertight, waterproof, rodentproof, structurally sound, and in good repair such that they comply with Subsection (b); and

(4) Maintain the yard and accessory structures such that they comply with Subsections (c) and (d).

(f) *Nuisances.* The interior and exterior of vacant and abandoned dwellings shall be maintained in a nuisance-free condition.