Town of Rome
Nekoosa, WI 54457
www.romewi.gov

AGENDA
TOWN OF ROME PARKS AND RECREATION MEETING

MONDAY, AUGUST 17, 2026 **4:00 P.M.** **ROME MUNICIPAL BUILDING**
1156 Alpine Drive
Nekoosa, WI 54457

1. Call to Order
2. Roll Call
3. Certify Posting of Meeting
4. Approve Agenda
5. Pledge of Allegiance
6. Citizen Comments – During the Citizen Comment period of the agenda the Parks and Recreation Committee welcomes comments from any town resident, not a member of the Parks and Recreation Committee, on any item not on the agenda. Please know that pursuant to State law the Commission cannot engage in conversation with you but may ask questions. The Commission may refer the item to staff, a standing committee or a future Parks and Recreation agenda for discussion and action. Each person wishing to speak will have up to 3 minutes to speak. Speakers are asked to submit a card to the Chair providing their name, address and topic for discussion

   The Commission will also take comment from the public on agenda items as called by the Chair, but not during Citizen Comment. Please note that once the Commission begins discussion on an agenda item no further comment will be allowed from the public on that issue

DISCUSSION AND POSSIBLE ACTION ON THE FOLLOWING ITEMS:

7. Discussion and possible action – Approval of the Monday, July 20, 2026 meeting minutes
8. Discussion and possible action – Vibrant Spaces Grant
9. Discussion and possible action – Shade Structures in the Rome Town Center
10. Discussion and possible action – Walden Park Update
11. Discussion and possible action – Outdoor Learning Equipment at Walden Park
12. Discussion and possible action – Monarch City, USA program

DATES AND ITEMS FOR FUTURE AGENDA/MEETINGS

13. Next agenda items

14. Next meeting date and time

ADJOURNMENT

"Speak Your Peace" Commitment – A reminder that the town has adopted the Nine Tools of Civility which commits the Parks and Recreation committee Members and the Public to be mindful of how we treat each other at meetings. Notification of this meeting has been posted in accordance with the Open Meeting Laws of the State of Wisconsin. The Parks and Recreation Committee may take action on any item on the agenda. It is possible that the members of and possibly a quorum of members of other governmental bodies of the municipality may be in attendance at the above-stated meeting to gather information; no action will be taken by any governmental body at the above-stated meeting other than the Parks and Recreation committee. Please note that, upon reasonable notice, efforts will be made to accommodate the needs of disabled individuals through appropriate aids and services. For additional information or to request this service, contact Wendy Newson, Town Clerk, at 1156 Alpine Drive, Nekoosa, WI 54457, ph. 715-325-8046.

Town of Rome Mission:
Positively applying the tools of government to serve and protect our people, strengthen our community and promote prosperity.

Town of Rome
Nekoosa, WI 54457
www.romewi.gov

MINUTES
TOWN OF ROME PARKS AND RECREATION COMMITTEE MEETING

MONDAY, JULY 20, 2026 4:00 P.M.

1. Call to Order

The meeting was called to order by Chairman Tim Reppen at 4:00 p.m.

2. Roll Call

Committee members present: Cyndee Lewis, Lori Fatla, Jill Reese and Tim Reppen
Committee members absent/excused: Sue Bultman and Michael Donigain
Also present: Director of Public Works, Cody Knoblock and Deputy Clerk/Treasurer, Taylor Owczynsky

3. Certify Posting of Meeting

Taylor Owczynsky certified that on Friday, July 17, 2026, the agenda for the Town of Rome Parks and Recreation Committee meeting for Monday, July 20, 2026 was posted at the following locations:

Posted at the Rome Town Hall	*3:40 p.m.*
Posted at Kwik Trip, LLC	*3:55 p.m.*
Posted at Nekoosa Port Edwards State Bank	*4:00 p.m.*
Emailed to the Wisconsin Rapids Tribune	*11:46 a.m.*

4. Approve Agenda

Motion by Lewis/Reese to approve the agenda as presented. Motion carried.

5. Pledge of Allegiance

6. Citizen Comments – During the Citizen Comment period of the agenda the Parks and Recreation Committee welcomes comments from any town resident, not a member of the Parks and Recreation Committee, on any item not on the agenda. Please know that pursuant to State law the Commission cannot engage in conversation with you but may ask questions. The Commission may refer the item to staff, a standing committee or a future Parks and Recreation agenda for discussion and action. Each person wishing to speak will have up to 3 minutes to speak. Speakers are asked to submit a card to the Chair providing their name, address and topic for discussion

   The Commission will also take comment from the public on agenda items as called by the Chair, but not during Citizen Comment. Please note that once the Commission begins discussion on an agenda item no further comment will be allowed from the public on that issue

   No Citizen Comments Received.

DISCUSSION AND POSSIBLE ACTION ON THE FOLLOWING ITEMS:

7. Discussion and possible action – Approval of the Monday, June 15, 2026 meeting minutes

DRAFT

Motion by Lewis/Reese to approve the June 15, 2026 meeting minutes. Motion carried.

8. Discussion and possible action – Vibrant Spaces Grant

No update at this time.

9. Discussion and possible action – Shade Structures in the Rome Town Center

Discussion on the shade structures that have been proposed in the Rome Town Center. Knoblock reached out to developer that designed the structure by the splash pad and has been unable to reach them. He attempted to contact the installation company and it seems they cannot be located and is unsure if they are still in business. Discussion regarding shade structures for by bandshell. Discussion regarding the current capital outlay for the budget; $53,819.40. Agenda item to come back next month with more quotes.

10. Discussion and possible action – Walden Park Update

Dave Trudeau from 14-mile Watershed Alliance emailed in an update prior to the meeting. The update was distributed to the committee members and Chairman Reppen read in the email for the record. Further update to come next month from Trudeau.

11. Discussion and possible action – Outdoor Learning Equipment at Walden Park

Discussion on potential outdoor learning equipment at Walden Park. Discussion to get a cost for a fish interpretative sign.

12. Discussion and possible action – Consideration of participation in the Monarch City, USA program

Discussion regarding Monarch City, USA program. The Town became a member of this program in July of 2017. Discussion on possible ways to promote this more in the community.

DATES AND ITEMS FOR FUTURE AGENDA/MEETINGS

13. Next agenda items

**Vibrant Spaces Grant*
**Shade Structures in the Rome Town Center*
**Outdoor Learning Equipment at Walden Park*
**Walden Park Update*
** Monarch City, USA program*

14. Next meeting date and time

August 17, 2026 at 4:00 p.m.

ADJOURNMENT
Motion by Lewis/Reese to adjourn at 4:35pm. Motion carried.

Respectfully submitted,

Taylor Owczynsky
Taylor Owczynsky
Town of Rome
Deputy Clerk/Treasurer

DRAFT

Taylor Owczynsky

From: Tim Reppen
Sent: Tuesday, August 11, 2026 11:58 AM
To: Taylor Owczynsky
Cc: Wendy Newsom
Subject: Fw: Quote 64958 from Pro Playgrounds
Attachments: Quote 64958 from Pro Playgrounds.pdf

From: Kevin Walther <kwalther@proplaygrounds.com>
Sent: Monday, July 27, 2026 2:17:08 PM
To: Tim Reppen
Subject: Quote 64958 from Pro Playgrounds

Tim,
Attached is something I worked up to get your feedback. If I need to have 72' of coverage on both sides I will have to request a custom rendering for that and pricing. Let me know if you have any questions.

Best Regards,

Kevin Walther
Account Executive

(Direct) 850-409-7972(Office) 1-800-573-7529

www.proplaygrounds.com

TRUST *the* EXPERTS

For over a decade, our customers have entrusted us to provide safe and affordable playground and recreational equipment. Our team of Certified General Contractors and Playground Safety Inspectors will insure that your project is completed to perfection, providing truly turnkey service, with every step of the process from planning and budgeting, through the installation being handled under one roof.

PRO PLAYGROUNDS

The Play & Recreation Experts

1-800-573-7529 | www.proplaygrounds.com

PRO PLAYGROUNDS
The Play & Recreation Experts
WWW.PROPLAYGROUNDS.COM | 1-800-573-PLAY

THE PRO PLAYGROUNDS DIFFERENCE

Equipment and Products

When you purchase playground equipment from us, you're buying direct. This means that you are getting the absolute lowest price possible. We do not utilize sales reps, middle men or distributors like many of our competitors do, this gives you more purchasing power. We have hundreds of playgrounds available for purchase and can custom design most anything to meet your needs. We have a vast product offering including shade structures, site amenities and playground surfacing like artificial turf and poured in place rubber.

Installation

We are one of only a few companies in the United States that actually service and install the products we sell in house. This means that the person you speak to when you buy your playground may very well be the person who installs it. Our competitors use local sub contractors, many of whom know nothing about installing a playground or playground safety, and worse many of whom are unlicensed, uninsured and a high risk.

Services

We are truly a full service parks and recreations firm. We take care of every aspect of your playground project in house, from the design, to the sale to the installation. We have in house capabilities that are unmatched by our competitors. From traditional construction needs like sidewalks, to the safety surfacing including poured in place rubber and rubber turf, a single contractor with a huge list of capabilities. Our competitors subcontract these services, that means higher prices, lower quality, longer lead times and a lack of accountability.

Licensing

We are State Certified General Contractors and licensed Playground Safety Inspectors. This means that we have the knowledge, experience and legal ability to complete your project. Many firms that install playground equipment are unlicensed, inexperienced and uninsured.

Experience

We have designed and installed over 500 playgrounds in the USA, from start to finish. We have experience with projects as small as $5,000 and as large as 1,000,000. Our firm has provided expert testimony in court cases involving playground equipment. When it comes to playgrounds, we are the experts.

Accountability

We still believe that the customer is always right. We also feel that our responsibilities to our customers do not end once we have completed a sale, in fact that's when they truly begin. Our service after the sale in unparalleled. If you have any problems or issues with your equipment, we resolve the problems in house. Our competitors have only one concern and that is closing the sale.

PRO PLAYGROUNDS
The Play & Recreation Experts

Pro Playgrounds
8490 Cabin Hill Road
Tallahassee, FL 32311

Quote

Date	Estimate #
7/27/2026	64958

Project Name
Shade Structure

Customer / Bill To	Ship To
Town of Rome ATTN: Tim Reppen 1156 Alpine Dr Rome, WI 54457	Town of Rome ATTN: Tim Reppen 1156 Alpine Dr Rome, WI 54457

WE WILL BEAT ANY PRICE BY 5%!

Item	Description	Qty	Cost	Total:
	Furnish Labor and Materials to:			
	1. Install 1 Multi Sail Shade Structure			
	SHADE STRUCTURE			
CSSD	Custom Sail Shade Design **3 Sails**	1	29,778.00	29,778.00
CLR	Colors: Frame - Spring Green			0.00
CLR	Colors: Fabric TBD			0.00
ENGS	Engineered Drawings for Shade Structure Only	1	850.00	850.00
Shipping	Combined Shipping and Freight Charges	1	4,433.00	4,433.00
	MATERIALS & INSTALLATION			
RBAR5	No. 5 Rebar	865	1.54328	1,334.94
RMC	Ready Mix Concrete 2500 PSI MIN	22	200.00	4,400.00
LBR	Labor and Installation	1	25,203.06	25,203.06
OSPERMIT	PERMIT - NOT IN FLORIDA - PERMITTING IS NOT INCLUDED IN THIS PRICE, CUSTOMER IS RESPONSIBLE FOR OBTAINING AND PAYING FOR ALL PERMITS IF REQUIRED.		0.00	0.00

AGREED AND ACCEPTED:
If the above total price, scope of work, specifications, terms and conditions are acceptable, sign below indicating your acceptance and authorization for Pro Playgrounds to proceed with the work and/or sales transaction described in this quotation. Upon signature and payment in accordance with this quote, Pro Playgrounds will proceed with the work and/or sales transaction.

Signature _____ Name / Title _____ Date ___/___/___

Subtotal:	$65,999.00
Sales Tax: (7.5%)	$0.00
Total:	$65,999.00

Terms and Conditions - Price valid for 30 days and subject to change. 1. If installation is not included with your purchase, client will be responsible for coordinating, receiving and unloading of all goods, delivery drivers will not help unload goods. 2. Client will be responsible to inspect goods for defect, damage or missing parts, any deficiency or missing parts must be noted on delivery slip. 3. Client will be responsible for costs due to cancelled or missed delivery appointments. 4. Client has reviewed all items, colors and descriptions on this quote for accuracy and correctness. 5. If quote includes installation of goods, the installation is subject to the terms and conditions of Pro Playgrounds "Standard Installation Agreement" a copy of which may be obtained from your Sales Representative.

3-Triangle Sail Shade

Column & Footing Schedule

Column ID	Column Size	Column Length	Square Footing Size	Auger Footing Size			
C1	Ø8.6" Sch-40	10	3.82 ' Sq. x 3.0' Deep	2.0' Dia. x N/A ' Deep	2.5' Dia. x N/A ' Deep	3.0' Dia. x 6.2 ' Deep	4.0' Dia. x ' Deep
C2	Ø10.8" Sch-40	12	5.92 ' Sq. x 3.0' Deep	2.0' Dia. x N/A ' Deep	2.5' Dia. x N/A ' Deep	3.0' Dia. x 14.87 Deep	4.0' Dia. x ' Deep
C3	Ø12.8" HSS	14	7.83 ' Sq. x 3.0' Deep	2.0' Dia. x N/A ' Deep	2.5' Dia. x N/A ' Deep	3.0' Dia. x 26.02 Deep	4.0' Dia. x ' Deep
C4	Ø10.8" Sch-40	10	5.4 ' Sq. x 3.0' Deep	2.0' Dia. x N/A ' Deep	2.5' Dia. x N/A ' Deep	3.0' Dia. x 12.39 Deep	4.0' Dia. x ' Deep
C5	Ø8.6" Sch-40	12	4.18 ' Sq. x 3.0' Deep	2.0' Dia. x N/A ' Deep	2.5' Dia. x N/A ' Deep	3.0' Dia. x 7.44 ' Deep	4.0' Dia. x ' Deep

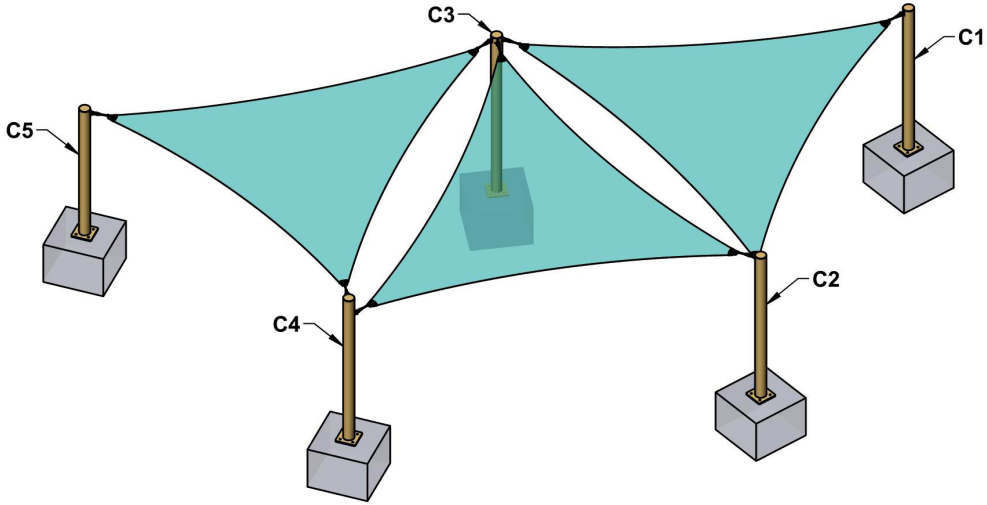

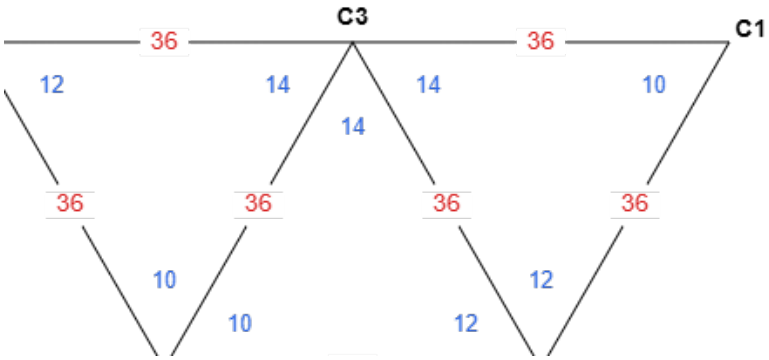

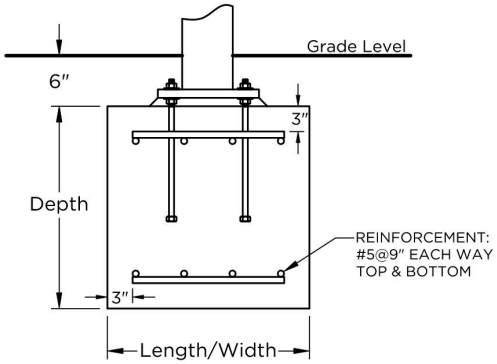

Square Footing

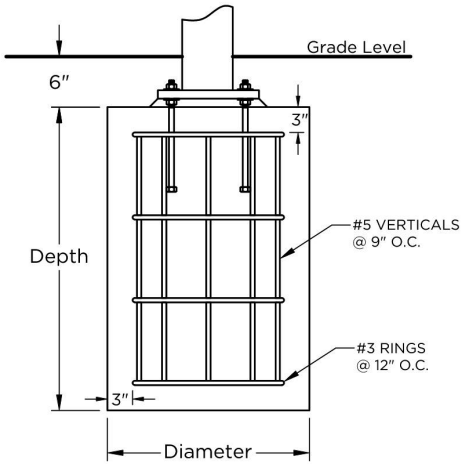

Auger Footing

Superior Shade

QUOTE

134916

SHADE STYLE

5-Column 3-Sail Shade

These drawings are for reference only and should not be used as construction details. They show the general character and rough dimensions of the structural features. Exact spans, fasteners, materials, and foundations can be determined by a licensed professional engineer upon request. Estimated footing size above is based on 1,500 PSF soil bearing pressure.

PRO PLAYGROUNDS
The Play & Recreation Experts

FRAME

Gloss

Ice Butter, Yellow, Butterscotch, Orange, Red, Burgundy, Royal Purple, Periwinkle, Azure, Sky Blue, Blue, Sea Mist

Ocean, Ice Mint, Chartreuse, Spring Green, Green, Dark Green, Sage, Brown, Beige, Vanilla, White, Black

Matte, Textured, or Metallic

Champagne, Metallic, Bronze, Starlight

FABRIC

Traditional Fabric

This option includes colors that are California Fire Marshal certified and pass the NFPA 701 or ASTM E84 tests. Select color options are flame retardant (FR).

Natural, Beige, Latte (FR), Desert Sand, Brown (FR), Sun Blaze (FR), Oxide Red (FR) NEW, Orange NEW, Yellow, Royal Purple, Aquamarine NEW, Sky Blue, Dove Blue (FR), True Blue (FR), Aquatic Blue, Navy Blue, Turquoise

Lime (FR), Mint Green (FR), Forest Green (FR), Brunswick Green, Rivergum, Midnight (FR), Silver (FR), Steel Gray, Pearl Onyx (FR)

Waterproof Fabric

This option is available exclusively for our Arched Cantilever, Flower, and Single Post and Cantilever Waterproof Umbrellas.

Tan, White

Dual Color Fabric

This option is available for an upcharge exclusively for our Hypar Umbrella, Triangle Sail, and Hyperbolic Sail.

Citrus, Sunburst, Macaw, Chameleon, Topaz, Amazonia, Savanna, Cobblestone, Gold Rush, Capri

Santorini, Maldives

COLOR OPTIONS

1-800-573-PLAY

WWW.PROPLAYGROUNDS.COM

PRO PLAYGROUNDS

The Play & Recreation Experts

Playground Equipment

- Over 200 commercial play units, plus endless customized design options, all IPEMA certified.
- Full line of accessory units including swing sets, spring riders, rope and rock climbers and more.
- Industry leading lifetime warranty and affordable pricing.
- Professionally installed by CPSI and CGC.

Shade Structures

- Large catalog of pre-designed units including hip and ridge shades, cantilever and umbrella shades.
- Broad design capability and customization to meet your shade needs, both standard and sails.
- 95% UV blocking, keeps people and equipment cool and protected.
- Compliant with FBC wind load requirements.

Surfacing Products

- Poured in place rubber surfacing for playgrounds, splash pads, entry ways, etc.
- Over 50 varieties of artificial turf for leisure, play, animal and sport applications.
- Eco friendly recycled rubber mulch for playground surfacing.
- Professional installation by certified installers.

Site Amenities and Dog Park

- Full catalog of benches and tables to meet your needs with custom colors, logos, finishes, etc.
- Trash receptacles, dog waste stations, grills, bike racks, bleachers and more, all customizable.
- Dog park accessories including obstacle courses, waste and watering stations, etc.
- Custom amenities, fire pits, ADA, etc.

Fitness and Athletic Equipment

- Selection of products for athletic needs including basketball, soccer and football goals.
- Outdoor fitness equipment for exercising, including cardiovascular and strength training products.
- Commercial grade products constructed with durable materials to ensure a lifetime of use.

Taylor Owczynsky

From: Tim Reppen
Sent: Tuesday, August 11, 2026 11:59 AM
To: Taylor Owczynsky
Cc: Wendy Newsom
Subject: Fw: Quote 64958 from Pro Playgrounds

From: Tim Reppen
Sent: Tuesday, August 4, 2026 9:26:48 AM
To: kwalther@proplaygrounds.com
Subject: Re: Quote 64958 from Pro Playgrounds

Hi Kevin,

Rome center Wisconsin The municipal address for the Town of Rome is 1156 Alpine Drive, Nekoosa, WI 54457, and the local Town Center area is located just off State Highway 13 near Timberline Parkway and Geneva Trail.

We are trying to stay in the $40,000 mark or lower.

Tim Reppen
Rome Town Board Supervisor

From: Kevin Walther <kwalther@proplaygrounds.com>
Sent: Tuesday, August 4, 2026 7:53:53 AM
To: Tim Reppen
Subject: Re: Quote 64958 from Pro Playgrounds

Tim,

Okay I wanted to see if you can provide the address to that site again to make sure I have what I need to submit another custom quote request to see what we can come up with for this space. All in what would you say roughly the town is willing to spend at this time so I can make sure to stay within budget for you all?

Best Regards,

Kevin Walther
Account Executive

(Direct) 850-409-7972
(Office) 1-800-573-7529

kwalther@proplaygrounds.com

PRO PLAYGROUNDS
The Play & Recreation Experts

From: Tim Reppen <reppen@romewi.gov>
To: "kwalther@proplaygrounds.com"<kwalther@proplaygrounds.com>
Date: Mon, 03 Aug 2026 15:46:30 -0400
Subject: Re: Quote 64958 from Pro Playgrounds

Hi Kevin,

Not sure what your asking. The area around the Bandstand is all grass. Its about a acre in size. This shade structure would be on the west side to provide shade as the Sun is setting for evening concerts in the Park.

Thanks
Tim

From: Kevin Walther <kwalther@proplaygrounds.com>
Sent: Monday, August 3, 2026 11:53:11 AM
To: Tim Reppen
Subject: Re: Quote 64958 from Pro Playgrounds

Tim,

So our sail shades would have a lot larger posts and footers are least 3' deep for each post. What is the address to the area you want this done and maybe sending that to my manufacturer they can get a better understanding to what custom way they need to go.

Best Regards,

Kevin Walther
Account Executive

(Direct) 850-409-7972
(Office) 1-800-573-7529

kwalther@proplaygrounds.com

PRO PLAYGROUNDS
The Play & Recreation Experts

From: Tim Reppen <reppen@romewi.gov>
To: "Kevin Walther"<kwalther@proplaygrounds.com>
Date: Sun, 02 Aug 2026 09:38:24 -0400
Subject: Re: Quote 64958 from Pro Playgrounds

Hi Kevin,

I've attached a picture of a Shade Structure similar to what we are looking for. Can you quote something like this?

Tim Reppen
Town of Rome Board Supervisor

From: Kevin Walther <kwalther@proplaygrounds.com>
Sent: Monday, July 27, 2026 2:17:08 PM
To: Tim Reppen
Subject: Quote 64958 from Pro Playgrounds

Tim,
Attached is something I worked up to get your feedback. If I need to have 72' of coverage on both sides I will have to request a custom rendering for that and pricing. Let me know if you have any questions.

Best Regards,

Kevin Walther
Account Executive

(Direct) 850-409-7972
(Office) 1-800-573-7529

www.proplaygrounds.com

Taylor Owczynsky

From: Tim Reppen
Sent: Tuesday, August 11, 2026 8:46 PM
To: Taylor Owczynsky
Cc: Wendy Newsom
Subject: Fw: Quote 65747 from Pro Playgrounds

From: Kevin Walther <kwalther@proplaygrounds.com>
Sent: Tuesday, August 11, 2026 2:53:45 PM
To: Tim Reppen
Subject: Re: Quote 65747 from Pro Playgrounds

Yessir roughly and if we need to confirm with a design I would just need to know exactly where you want it and can get my design team on it for you all to see it visually.

Best Regards,

Kevin Walther
Account Executive

(Direct) 850-409-7972
(Office) 1-800-573-7529

kwalther@proplaygrounds.com

PRO PLAYGROUNDS
The Play & Recreation Experts

From: Tim Reppen <reppen@romewi.gov>
To: "Kevin Walther"<kwalther@proplaygrounds.com>
Date: Tue, 11 Aug 2026 15:51:57 -0400
Subject: Re: Quote 65747 from Pro Playgrounds

Hi Kevin,

Is this about 50 feet coverage I presume?

Tim Reppen

From: Kevin Walther <kwalther@proplaygrounds.com>
Sent: Tuesday, August 11, 2026 2:47:31 PM
To: Tim Reppen
Subject: Quote 65747 from Pro Playgrounds

Tim,
Attached is another quote I worked up for you to review. Please let me know your thoughts.

Best Regards,

Kevin Walther
Account Executive

(Direct) 850-409-7972
(Office) 1-800-573-7529

www.proplaygrounds.com

TRUST *the* EXPERTS

For over a decade, our customers have entrusted us to provide safe and affordable playground and recreational equipment. Our team of Certified General Contractors and Playground Safety Inspectors will insure that your project is completed to perfection, providing truly turnkey service, with every step of the process from planning and budgeting, through the installation being handled under one roof.

PRO PLAYGROUNDS

The Play & Recreation Experts

1-800-573-7529 | www.proplaygrounds.com

PRO PLAYGROUNDS
The Play & Recreation Experts
WWW.PROPLAYGROUNDS.COM | 1-800-573-PLAY

THE PRO PLAYGROUNDS DIFFERENCE

Equipment and Products

When you purchase playground equipment from us, you're buying direct. This means that you are getting the absolute lowest price possible. We do not utilize sales reps, middle men or distributors like many of our competitors do, this gives you more purchasing power. We have hundreds of playgrounds available for purchase and can custom design most anything to meet your needs. We have a vast product offering including shade structures, site amenities and playground surfacing like artificial turf and poured in place rubber.

Installation

We are one of only a few companies in the United States that actually service and install the products we sell in house. This means that the person you speak to when you buy your playground may very well be the person who installs it. Our competitors use local sub contractors, many of whom know nothing about installing a playground or playground safety, and worse many of whom are unlicensed, uninsured and a high risk.

Services

We are truly a full service parks and recreations firm. We take care of every aspect of your playground project in house, from the design, to the sale to the installation. We have in house capabilities that are unmatched by our competitors. From traditional construction needs like sidewalks, to the safety surfacing including poured in place rubber and rubber turf, a single contractor with a huge list of capabilities. Our competitors subcontract these services, that means higher prices, lower quality, longer lead times and a lack of accountability.

Licensing

We are State Certified General Contractors and licensed Playground Safety Inspectors. This means that we have the knowledge, experience and legal ability to complete your project. Many firms that install playground equipment are unlicensed, inexperienced and uninsured.

Experience

We have designed and installed over 500 playgrounds in the USA, from start to finish. We have experience with projects as small as $5,000 and as large as 1,000,000. Our firm has provided expert testimony in court cases involving playground equipment. When it comes to playgrounds, we are the experts.

Accountability

We still believe that the customer is always right. We also feel that our responsibilities to our customers do not end once we have completed a sale, in fact that's when they truly begin. Our service after the sale in unparalleled. If you have any problems or issues with your equipment, we resolve the problems in house. Our competitors have only one concern and that is closing the sale.

PRO PLAYGROUNDS
The Play & Recreation Experts

Pro Playgrounds
8490 Cabin Hill Road
Tallahassee, FL 32311

Quote

Date	Estimate #
8/11/2026	65747

Project Name
Shade Structure

Customer / Bill To	Ship To
Town of Rome ATTN: Tim Reppen 1156 Alpine Dr Nekoosa, WI 54457	Town of Rome ATTN: Tim Reppen 1156 Alpine Dr Nekoosa, WI 54457

GUARANTEED BEST PRICE GUARANTEED

WE WILL BEAT ANY PRICE BY 5%!

Item	Description	Qty	Cost	Total:
	Furnish Labor and Materials to:			
	1. Install 1 Multi Sail Shade Structure			
	SHADE STRUCTURE			
CSSD	Custom Sail Shade Design **2 Sails**	1	13,932.00	13,932.00
CLR	Colors: Frame - Spring Green			0.00
CLR	Colors: Fabric TBD			0.00
ENGS	Engineered Drawings for Shade Structure Only	1	850.00	850.00
Shipping	Combined Shipping and Freight Charges	1	2,838.00	2,838.00
	MATERIALS & INSTALLATION			
RBAR5	No. 5 Rebar	234	1.70085	398.00
RMC	Ready Mix Concrete 2500 PSI MIN	6	200.00	1,200.00
LBR	Labor and Installation	1	13,381.00	13,381.00
OSPERMIT	PERMIT - NOT IN FLORIDA - PERMITTING IS NOT INCLUDED IN THIS PRICE, CUSTOMER IS RESPONSIBLE FOR OBTAINING AND PAYING FOR ALL PERMITS IF REQUIRED.		0.00	0.00

AGREED AND ACCEPTED:
If the above total price, scope of work, specifications, terms and conditions are acceptable, sign below indicating your acceptance and authorization for Pro Playgrounds to proceed with the work and/or sales transaction described in this quotation. Upon signature and payment in accordance with this quote, Pro Playgrounds will proceed with the work and/or sales transaction.

Signature Name / Title Date / /

Subtotal:	$32,599.00
Sales Tax: (7.5%)	$0.00
Total:	$32,599.00

Terms and Conditions - Price valid for 30 days and subject to change. 1. If installation is not included with your purchase, client will be responsible for coordinating, receiving and unloading of all goods, delivery drivers will not help unload goods. 2. Client will be responsible to inspect goods for defect, damage or missing parts, any deficiency or missing parts must be noted on delivery slip. 3. Client will be responsible for costs due to cancelled or missed delivery appointments. 4. Client has reviewed all items, colors and descriptions on this quote for accuracy and correctness. 5. If quote includes installation of goods, the installation is subject to the terms and conditions of Pro Playgrounds "Standard Installation Agreement" a copy of which may be obtained from your Sales Representative.

2-Triangle Sail Shade

Column & Footing Schedule

Column ID	Column Size	Column Length	Square Footing Size	Auger Footing Size			
C1	Ø5.5" Sch-40	8	2.65' Sq. x 3.0' Deep	2.0' Dia. x N/A ' Deep	2.5' Dia. x 4.3 ' Deep	3.0' Dia. x N/A ' Deep	4.0' Dia. x ' Deep
C2	Ø8.6" Sch-40	10	3.75' Sq. x 3.0' Deep	2.0' Dia. x N/A ' Deep	2.5' Dia. x N/A ' Deep	3.0' Dia. x 5.98 ' Deep	4.0' Dia. x ' Deep
C3	Ø8.6" Sch-40	12	4.11' Sq. x 3.0' Deep	2.0' Dia. x N/A ' Deep	2.5' Dia. x N/A ' Deep	3.0' Dia. x 7.17 ' Deep	4.0' Dia. x ' Deep
C4	Ø5.5" Sch-40	8	2.65' Sq. x 3.0' Deep	2.0' Dia. x N/A ' Deep	2.5' Dia. x 4.3 ' Deep	3.0' Dia. x N/A ' Deep	4.0' Dia. x ' Deep

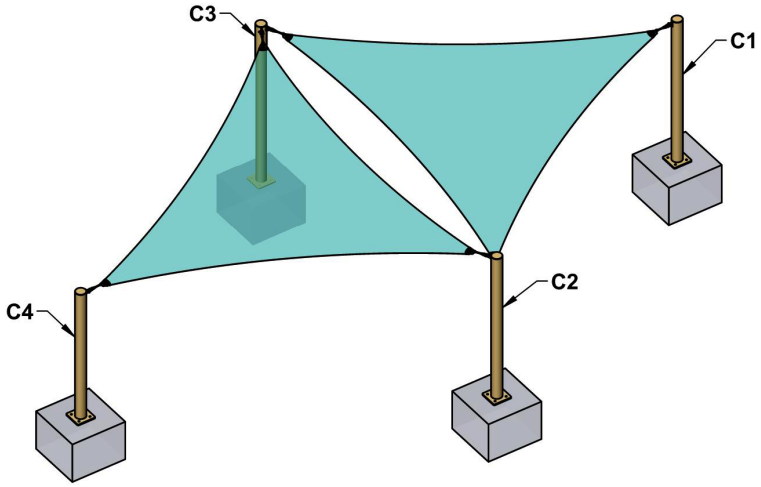

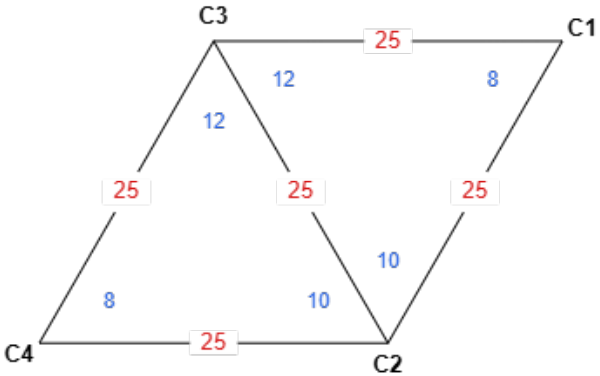

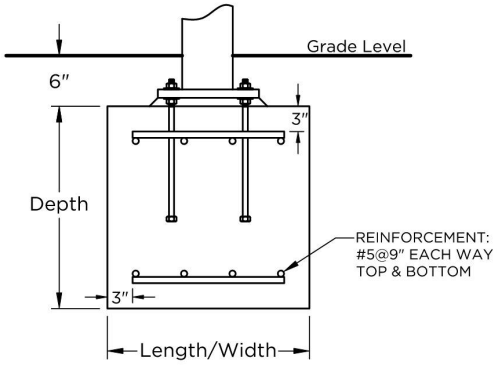

Square Footing

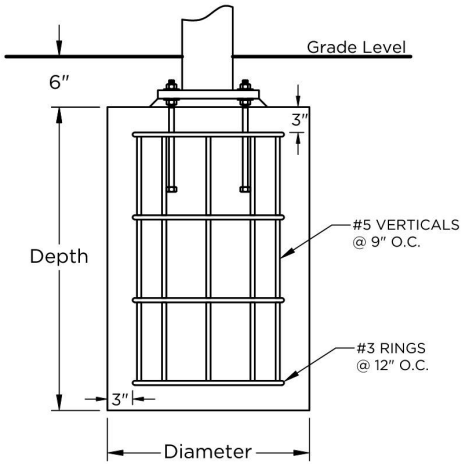

Auger Footing

Superior Shade

QUOTE

136030

SHADE STYLE

4-Column 2-Sail Shade

These drawings are for reference only and should not be used as construction details. They show the general character and rough dimensions of the structural features. Exact spans, fasteners, materials, and foundations can be determined by a licensed professional engineer upon request. Estimated footing size above is based on 1,500 PSF soil bearing pressure.

PRO PLAYGROUNDS
The Play & Recreation Experts

FRAME

Gloss

Ice Butter, Yellow, Butterscotch, Orange, Red, Burgundy, Royal Purple, Periwinkle, Azure, Sky Blue, Blue, Sea Mist

Ocean, Ice Mint, Chartreuse, Spring Green, Green, Dark Green, Sage, Brown, Beige, Vanilla, White, Black

Matte, Textured, or Metallic

Champagne, Metallic, Bronze, Starlight

FABRIC

Traditional Fabric

This option includes colors that are California Fire Marshal certified and pass the NFPA 701 or ASTM E84 tests. Select color options are flame retardant (FR).

Natural, Beige, Latte (FR), Desert Sand, Brown (FR), Sun Blaze (FR), Oxide Red (FR) NEW, Orange NEW, Yellow, Royal Purple, Aquamarine NEW, Sky Blue, Dove Blue (FR), True Blue (FR), Aquatic Blue, Navy Blue, Turquoise

Lime (FR), Mint Green (FR), Forest Green (FR), Brunswick Green, Rivergum, Midnight (FR), Silver (FR), Steel Gray, Pearl Onyx (FR)

Waterproof Fabric

This option is available exclusively for our Arched Cantilever, Flower, and Single Post and Cantilever Waterproof Umbrellas.

Tan, White

Dual Color Fabric

This option is available for an upcharge exclusively for our Hypar Umbrella, Triangle Sail, and Hyperbolic Sail.

Citrus, Sunburst, Macaw, Chameleon, Topaz, Amazonia, Savanna, Cobblestone, Gold Rush, Capri

Santorini, Maldives

COLOR OPTIONS

1-800-573-PLAY

WWW.PROPLAYGROUNDS.COM

PRO PLAYGROUNDS

The Play & Recreation Experts

Playground Equipment

- Over 200 commercial play units, plus endless customized design options, all IPEMA certified.
- Full line of accessory units including swing sets, spring riders, rope and rock climbers and more.
- Industry leading lifetime warranty and affordable pricing.
- Professionally installed by CPSI and CGC.

Shade Structures

- Large catalog of pre-designed units including hip and ridge shades, cantilever and umbrella shades.
- Broad design capability and customization to meet your shade needs, both standard and sails.
- 95% UV blocking, keeps people and equipment cool and protected.
- Compliant with FBC wind load requirements.

Surfacing Products

- Poured in place rubber surfacing for playgrounds, splash pads, entry ways, etc.
- Over 50 varieties of artificial turf for leisure, play, animal and sport applications.
- Eco friendly recycled rubber mulch for playground surfacing.
- Professional installation by certified installers.

Site Amenities and Dog Park

- Full catalog of benches and tables to meet your needs with custom colors, logos, finishes, etc.
- Trash receptacles, dog waste stations, grills, bike racks, bleachers and more, all customizable.
- Dog park accessories including obstacle courses, waste and watering stations, etc.
- Custom amenities, fire pits, ADA, etc.

Fitness and Athletic Equipment

- Selection of products for athletic needs including basketball, soccer and football goals.
- Outdoor fitness equipment for exercising, including cardiovascular and strength training products.
- Commercial grade products constructed with durable materials to ensure a lifetime of use.