TOWNSHIP COMMITTEE MEETING

October 28, 2026

CHECK LIST GRAND TOTALS

ACCOUNT	AMOUNT
Alliance Against Abuse	
Animal Control	
Capital Fund	$ 20,396.61
COAH	
Construction Trust	$ 221.85
Current Fund	$ 260,256.27
Escrow	$ 24,579.75
Farmland Preservation Trust	
Grant Fund	$ 500.00
Law	
Tax Collectors Trust	
Trust Fund	$ 5,125.90
TOTAL:	$ 311,080.38

I hereby certify that the foregoing check list totaling $311,080.38 is true and accurate and was approved for payment at the Township Committee meeting on October 28, 2026.

_____

John D. Antonides, Finance Officer

Range of Checking Accts: AASA to TRWIRE Range of Check Dates: 10/14/26 to 10/26/26
Report Type: All Checks Report Format: Detail Check Type: Computer: Y Manual: Y Dir Deposit: Y

Check #	Check Date	Vendor / PO #	Item	Description	Amount Paid	Charge Account	Account Type	Reconciled/Void	Ref Num	Contract	Ref Seq	Acct
CAPITAL		CAPITAL										
2982	10/21/26	T M T & M ASSOCIATES							13688			
		26-01999	1	MISC ROADWAY REPAIR AREAS	2,542.00	C-02- -078-228 VARIOUS ROAD IMPROVEMENTS	Budget				1	1
		26-01999	2	IMPROVEMENTS TO HOMINY HILL RD	5,612.00	C-02- -084-251 IMPROVEMENTS TO HOMINY HILL ROAD	Budget				2	1
		26-01999	3	IMPROVEMENTS TO MONTROSE RD.	178.00	C-02- -078-229 MONTROSE ROAD COURT ROAD IMPROVEMENTS	Budget				3	1
		26-01999	4	2026 GENERAL ASST. ROADWAYS	979.00	C-02- -084-252 VARIOUS ROAD IMPROVEMENTS	Budget				4	1
		26-01999	8	2026 GENERAL ASSIST. DRAINAGE	534.00	C-02- -084-252 VARIOUS ROAD IMPROVEMENTS	Budget				5	1
		26-01999	10	FY2027 NJDOT ROAD PROGRAM	4,517.50	C-02- -084-252 VARIOUS ROAD IMPROVEMENTS	Budget				6	1
					14,362.50							
2983	10/26/26	FIRE APP FIRE APPARATUS CONSULTANTS LLC							13696			
		26-02076	1	TRUCK/TOWN SPECS FOR 84-190	5,510.11	C-02- -060-296 FUTURE PURCHASE OF FIRE TRUCK	Budget				2	1
2984	10/26/26	TECHNOLO TECHNOLOGY VISIONARIES LLC							13696			
		26-01700	1	CONFERENCING CAMERA-POLICE	524.00	C-02- -084-249 PURCHASE OF TOWNSHIP COMPUTERS/COPIERS	Budget				1	1

Checking Account Totals	Paid	Void	Amount Paid	Amount Void
Checks:	3	0	20,396.61	0.00
Direct Deposit:	0	0	0.00	0.00
Total:	3	0	20,396.61	0.00

Check #	Check Date	Vendor / PO #	Item	Description	Amount Paid	Charge Account	Account Type	Reconciled/Void	Ref Num	Contract	Ref Seq	Acct
CON		CONSTRUCTION										
4345	10/23/26	JLOSACCO JEFFREY LOSACCO							13693			
		26-02047	1	PERSONAL MILEAGE	121.80	T-04- -017-287 PERSONAL AUTO & MILEAGE	Budget				1	1
4346	10/23/26	RROSAMIL RALPH ROSAMILIA							13693			
		26-02048	1	PERSONAL MILEAGE	100.05	T-04- -017-287 PERSONAL AUTO & MILEAGE	Budget				2	1

Checking Account Totals	Paid	Void	Amount Paid	Amount Void
Checks:	2	0	221.85	0.00
Direct Deposit:	0	0	0.00	0.00
Total:	2	0	221.85	0.00

Check #	Check Date	Vendor / PO #	Item	Description	Amount Paid	Charge Account	Account Type	Reconciled/Void	Ref Num	Contract	Ref Seq	Acct
CURRENT												
57215	10/21/26	AIRPO AIRPOWER INTERNATIONAL, INC.							13686			
		26-02003	1	ANNUAL SVS CONTRACT-FIRE CO.	1,925.00	6-01- -015-452 FIRE BUDGET	Budget				11	1

Check #	Check Date	Vendor / PO #	Item	Description	Amount Paid	Charge Account	Account Type	Reconciled/Void	Contract	Ref Num	Ref Seq	Acct
CURRENT				Continued								
57216	10/21/26	ALL HAND ALL HANDS FIRE EQUIPMENT, LLC								13686		
	26-02001		1	HUNTER PRO BOOTS - J. JACOBY	399.63	6-01- -015-452 FIRE BUDGET	Budget				9	1
	26-02007		1	MISTING FAN - FIRE CO.#2	1,070.00	6-01- -015-452 FIRE BUDGET	Budget				15	1
					1,469.63							
57217	10/21/26	AMAZON AMAZON CAPITAL SERVICES								13686		
	26-01945		1	EMERGENCY CAR KIT	455.55	6-01- -017-206 SAFETY SUPPLIES	Budget				4	1
	26-01945		2	WORK GLOVES	16.72	6-01- -017-206 SAFETY SUPPLIES	Budget				5	1
					472.27							
57218	10/21/26	ATLASWEL ATLAS WELDING SUPPLY CO. INC.								13686		
	26-02002		1	OXYGEN-FIRST AID	87.20	6-01- -018-421 CONTRIBUTIONS TO FIRST AID	Budget				10	1
57219	10/21/26	BANISCH BANISCH ASSOCIATES, INC.								13686		
	26-01997		1	PROFESSIONAL PLANNING SERVICES	1,793.75	6-01- -006-347 AFFORDABLE HOUSING	Budget				6	1
57220	10/21/26	CABDH OPTIMUM								13686		
	26-02005		1	OPTIMUM ON-LINE TOWN HALL	135.44	6-01- -034-903 TELEPHONE-BUILDINGS & GROUNDS	Budget				13	1
57221	10/21/26	CAMPSUPP CAMPBELL SUPPLY CO, LLC								13686		
	26-02006		1	EVALUATE TRANSFER CASE-FIRE CO	681.25	6-01- -015-452 FIRE BUDGET	Budget				14	1
57222	10/21/26	CARRI CARRIAGE HOUSE CLEANERS								13686		
	26-01814		1	APR/MAY/JUN/JUL 2026 CLEANINGS	1,400.00	6-01- -017-205 WEARING APPAREL, UNIFORMS	Budget				3	1
57223	10/21/26	HILSE HILSEN TERMITE & PEST CONTROL								13686		
	26-02000		1	QTRLY PEST CONTROL SVS-SEPT'26	445.00	6-01- -008-245 EXTERMINATION COSTS	Budget				8	1
57224	10/21/26	JR HE JR HENDERSON LABS								13686		
	26-01998		1	EFFLUENT COMP & GRAB SEPT 2026	181.00	6-01- -008-233 MAINT & REPAIRS OF FACILITY	Budget				7	1
57225	10/21/26	MISTRAS MISTRAS GROUP, INC.								13686		
	26-01166		1	LADDER TESTING-FIRE CO. 84-190	1,100.00	6-01- -015-452 FIRE BUDGET	Budget				1	1
57226	10/21/26	PICKWICK PICKWICK WELL DRILLING INC.								13686		
	26-01635		1	LIBRARY-REPLACEMENT WELL	14,030.00	6-01- -043-233 MAINT & REPAIRS OF FACILITY	Budget				2	1

Check # Check Date Vendor / PO #	Item	Description	Amount Paid	Charge Account	Account Type	Reconciled/Void Ref Num Contract	Ref Seq Acct
CURRENT		Continued					
57227 10/21/26 VERIZON VERIZON WIRELESS						13686	
26-02004	1	MONTHLY WIRELESS-POLICE	868.58	6-01- -034-903 TELEPHONE-BUILDINGS & GROUNDS	Budget	12	1
26-02011	1	FIRE DEPARTMENT MDT CELL SERV.	160.16	6-01- -015-452 FIRE BUDGET	Budget	16	1
			1,028.74				
57228 10/21/26 T M T & M ASSOCIATES						13689	
26-01999	5	2026 GENERAL ENGINEERING	2,474.00	6-01- -007-277 ENGINEERING SERVICES	Budget	1	1
26-01999	6	REMEDIAL INVESTIGA.-MAIDA SITE	344.44	6-01- -007-277 ENGINEERING SERVICES	Budget	2	1
26-01999	7	TRAFFIC SPEED STUDY-MONTROSE R	133.50	6-01- -007-277 ENGINEERING SERVICES	Budget	3	1
26-01999	9	2026 GENERAL ASSISTANCE INSPEC	356.00	6-01- -007-277 ENGINEERING SERVICES	Budget	4	1
26-01999	11	MAIDA PROPERTY-REMEDIAL ACTION	6,193.04	T-04- -021-201 MISCELLANEOUS EXPENSES	Budget	5	1
			9,500.98				
57229 10/23/26 ALL HAND ALL HANDS FIRE EQUIPMENT, LLC						13692	
26-02067	1	EXTRICATION GLOVES-FIRE CO #2	522.50	6-01- -015-452 FIRE BUDGET	Budget	22	1
26-02068	1	FIBERGLASS POLES-FIRE CO #2	367.20	6-01- -015-452 FIRE BUDGET	Budget	23	1
			889.70				
57230 10/23/26 AMAZON AMAZON CAPITAL SERVICES						13692	
26-01116	1	TECH SUPPLIES	170.61	6-01- -027-264 COMPUTER SUPPORT	Budget	1	1
26-01116	2	TORQUE SOCKET	26.64	6-01- -027-213 SMALL TOOLS & EQUIPMENT	Budget	2	1
26-01116	3	CHOCKS/FOGGERS	135.95	6-01- -027-256 MAINT. & REPAIRS EQUIPMENT	Budget	3	1
			333.20				
57231 10/23/26 ASBUR GANNET NY/NJ LOCALIQ						13692	
26-02046	1	LEGAL NOTICES	61.40	6-01- -001-218 ADVERTISING	Budget	16	1
57232 10/23/26 BAIL3 BAILEY'S SQUARE JANITORIAL SVC						13692	
26-02075	1	MNTHLY CLEANING SVS-POLICE	1,380.00	6-01- -008-298 PRIVATE JANITORIAL SERVICES	Budget	29	1
26-02075	2	MNTHLY CLEANING SVS-DPW	216.50	6-01- -008-298 PRIVATE JANITORIAL SERVICES	Budget	30	1
26-02075	3	MNTHLY CLEANING SVS-LIBRARY	405.00	6-01- -008-298 PRIVATE JANITORIAL SERVICES	Budget	31	1
26-02075	4	MNTHLY CLEANING SVS-COMMUNITY	360.00	6-01- -008-298 PRIVATE JANITORIAL SERVICES	Budget	32	1
26-02075	5	MNTHLY CLEANING SVS-TOWN HALL	495.00	6-01- -008-298 PRIVATE JANITORIAL SERVICES	Budget	33	1

Check #	Check Date	Vendor	PO #	Item	Description	Amount Paid	Charge Account	Account Type	Reconciled/Void	Contract	Ref Num	Ref Seq	Acct
CURRENT					Continued								
57232		BAILEY'S SQUARE JANITORIAL SVC Continued											
			26-02075	6	MNTHLY CLEANING SVS-TH ANNEX	471.80	6-01- -008-298 PRIVATE JANITORIAL SERVICES	Budget			34	1	
			26-02075	7	MNTHLY CLEANING SVS-FIRST AID	120.00	6-01- -008-298 PRIVATE JANITORIAL SERVICES	Budget			35	1	
			26-02075	8	MNTHLY CLEANING SVS-RECREATION	360.00	6-01- -008-298 PRIVATE JANITORIAL SERVICES	Budget			36	1	
						3,808.30							
57233	10/23/26	CABF1 OPTIMUM									13692		
			26-02085	1	ON-LINE FIRE CO #2	147.02	6-01- -015-456 FIRE CO. BUILDING MAINT. # 2	Budget			38	1	
57234	10/23/26	CABLIB OPTIMUM									13692		
			26-02020	1	INTERNET ACCESS-LIBRARY	154.95	6-01- -043-271 TELEPHONE	Budget			5	1	
57235	10/23/26	HAWRILUK GREGORY HAWRILUK									13692		
			26-02059	1	HEALTH DEPT SVS APR-JUN 2026	169.00	6-01- -019-298 PROFESSIONAL SERVICES	Budget			19	1	
57236	10/23/26	HOSE SHO THE HOSE SHOP									13692		
			26-02070	1	EXHAUST SYSTEM HOSES-FIRE CO#2	174.80	6-01- -015-456 FIRE CO. BUILDING MAINT. # 2	Budget			25	1	
57237	10/23/26	JCPL8 JCP&L/REMITTANCE PROCES. CTR									13692		
			26-02072	1	A/C#100150574422-MUNI COMPLEX	4,151.21	6-01- -034-803 ELECTRICITY-BUILDINGS & GROUND	Budget			27	1	
			26-02086	1	A/C #100009611227-FIRE CO #2	908.73	6-01- -015-456 FIRE CO. BUILDING MAINT. # 2	Budget			39	1	
						5,059.94							
57238	10/23/26	JSRHC JERSEY SHORE REGIONAL HEALTH									13692		
			26-02019	1	MC PUBLIC HEALTH CONTRACT FEES	5,435.46	6-01- -019-298 PROFESSIONAL SERVICES	Budget			4	1	
57239	10/23/26	KING MOE KING MOENCH & COLLINS LLP									13692		
			26-02023	1	AFFORD.HOUSING SPECIAL COUNSEL	21,794.76	6-01- -006-347 AFFORDABLE HOUSING	Budget			7	1	
57240	10/23/26	MICH1 MICHAEL B. STEIB, P.A.									13692		
			26-02024	1	LITIGATION FEES	357.00	6-01- -006-348 ZONING BOARD VS. MOCKINGBIRD	Budget			8	1	
			26-02025	1	LITIGATION FEES	969.00	6-01- -006-329 SPECIAL COUNSEL-CARM'S FARM	Budget			9	1	
			26-02026	1	LITIGATION FEES	85.00	6-01- -006-346 NOTARO PLANNING BOARD	Budget			10	1	
						1,411.00							
57241	10/23/26	NJ NA NJ NATURAL GAS COMPANY									13692		
			26-02084	1	A/C#230000012932/FIRE CO#2	162.03	6-01- -015-456 FIRE CO. BUILDING MAINT. # 2	Budget			37	1	

Check #	Check Date	Vendor / PO #	Item	Description	Amount Paid	Charge Account	Account Type	Reconciled/Void	Ref Num	Contract	Ref Seq	Acct
CURRENT				Continued								
57242	10/23/26	PREC ALS GROUP USA, CORP.							13692			
	26-02057	1	POLICE DEPT WATER TESTING	275.00	6-01- -008-233 MAINT & REPAIRS OF FACILITY	Budget				17		1
	26-02058	1	WELL WATER SAMPLING 3RD QTR	1,600.00	6-01- -008-233 MAINT & REPAIRS OF FACILITY	Budget				18		1
				1,875.00								
57243	10/23/26	RUTCLERK RUTGERS UNIVERSITY							13692			
	26-02022	1	INFORMATION & RECORDS MGMT	695.00	6-01- -001-281 TRAVEL, CONF. & TRAIN. FEES	Budget				6		1
57244	10/23/26	SPECT SPECTROTEL							13692			
	26-02060	1	TELEPHONE CHARGES FOR TOWNSHIP	1,772.51	6-01- -034-903 TELEPHONE-BUILDINGS & GROUNDS	Budget				20		1
	26-02060	2	TELEPHONE CHARGES FOR TOWNSHIP	150.50	6-01- -034-903 TELEPHONE-BUILDINGS & GROUNDS	Budget				21		1
				1,923.01								
57245	10/23/26	STAPE STAPLES ADVANTAGE							13692			
	26-02040	1	PAPER MATE WITEOUT TAPE	6.02	6-01- -001-201 GENERAL OFFICE SUPPLIES	Budget				11		1
	26-02040	2	HP 58X BLACK HIGH YIELD TONER	302.43	6-01- -003-201 GENERAL OFFICE SUPPLIES	Budget				12		1
	26-02040	3	STAPLES 8.5 X 14 COPY PAPER	71.67	6-01- -001-201 GENERAL OFFICE SUPPLIES	Budget				13		1
	26-02040	4	TRU RED 8.5"X 11" COPY PAPER,	90.48	6-01- -001-201 GENERAL OFFICE SUPPLIES	Budget				14		1
	26-02040	5	ENGRAVED SIGN	23.99	6-01- -001-201 GENERAL OFFICE SUPPLIES	Budget				15		1
				494.59								
57246	10/23/26	TASC TASC FIRE APPARATUS, INC.							13692			
	26-02069	1	10FT FOLDING LADDER-FIRE CO #2	832.65	6-01- -015-452 FIRE BUDGET	Budget				24		1
57247	10/23/26	TOWN WEB TOWN WEB DESIGN, LLC							13692			
	26-02071	1	ANNUAL SERVICE FEES	3,620.00	6-01- -001-298 PROFESSIONAL SERVICES	Budget				26		1
57248	10/23/26	VERIZON VERIZON WIRELESS							13692			
	26-02074	1	MONTHLY WIRELESS CHARGES	876.82	6-01- -034-904 TELEPHONE-CELL PHONES	Budget				28		1
57249	10/26/26	33 EA 33 EAST CAR WASH							13695			
	26-02082	1	CAR WASHES - SEPTEMBER 2026	45.00	6-01- -017-224 MAINT. & REPAIRS VEHICLES	Budget				36		1
57250	10/26/26	ALL HAND ALL HANDS FIRE EQUIPMENT, LLC							13695			
	26-02012	1	HOSE CART - FIRE CO.#2	4,063.60	6-01- -015-452 FIRE BUDGET	Budget				2		1

Check #	Check Date	Vendor					Reconciled/Void	Ref Num	
PO #	Item	Description	Amount Paid	Charge Account	Account Type	Contract	Ref	Seq	Acct
CURRENT			Continued						
57251	10/26/26	AMAZON AMAZON CAPITAL SERVICES						13695	
26-02031	1	VARIOUS BLD/DPW SUPPLIES	733.37	6-01- -027-233 MAINT & REPAIRS OF FACILITY	Budget			9	1
26-02043	1	PERFECTWARE NAPKINS	67.52	6-01- -023-215 AWARDS, SPECIAL EVENTS	Budget			21	1
26-02043	2	SWISS MISS HOT COCOA	104.16	6-01- -023-215 AWARDS, SPECIAL EVENTS	Budget			22	1
26-02043	3	BRACHS CANDY CANES	107.04	6-01- -023-215 AWARDS, SPECIAL EVENTS	Budget			23	1
26-02043	4	DISPOSABLE COFFEE CUPS	128.10	6-01- -023-215 AWARDS, SPECIAL EVENTS	Budget			24	1
			1,140.19						
57252	10/26/26	BUCKS BUCK'S CUTTING EDGE SERVICE						13695	
26-02030	1	TREE REMOVAL:RESOLUTION 26-181	22,800.00	6-01- -008-251 MISC. SUPPLIES & SERVICES	Budget			7	1
26-02030	2	TREE REMOVAL (2)	2,200.00	6-01- -027-296 PROFESSIONAL TREE SERVICES	Budget			8	1
			25,000.00						
57253	10/26/26	CARRIER CARRIER CORPORATION						13695	
26-02028	1	SERVICE CALL	2,098.00	6-01- -008-233 MAINT & REPAIRS OF FACILITY	Budget			5	1
26-02028	2	MAINTENANCE - OCTOBER 2026	1,580.00	6-01- -008-233 MAINT & REPAIRS OF FACILITY	Budget			6	1
			3,678.00						
57254	10/26/26	COLTN COLTS NECK INN						13695	
26-02017	1	SENIOR CLUB MEETING 10/7/26	2,225.00	6-01- -023-241 CONTRIBUTIONS TO SENIOR CITIZENS	Budget			3	1
57255	10/26/26	COUA3 COUNTY OF MONMOUTH						13695	
26-02081	1	POLICE VEHICLE MAINT. AUG 2026	5,669.26	6-01- -044-583 INTERLOCAL SERVICES-POLICE MECH SERVICES	Budget			35	1
57256	10/26/26	EAGLE EQ EAGLE EQUIPMENT CORPORATION						13695	
26-02052	1	COMPACTOR REPAIR	859.90	6-01- -024-462 DROP OFF CENTER	Budget			27	1
57257	10/26/26	FREE1 FREEHOLD FORD, INC						13695	
26-02034	1	VARIOUS PARTS	864.52	6-01- -027-256 MAINT. & REPAIRS EQUIPMENT	Budget			14	1
57258	10/26/26	GREENWAY GREENWAY INDUSTRIES OF NJ, INC						13695	
26-02050	1	ASPHALT	88.29	6-01- -027-231 RD. SFTY & TRAFFIC SUPP/MAT	Budget			26	1
57259	10/26/26	MAZZA MAZZA RECYCLING SERVICES, LTD.						13695	
26-02042	1	BULKY WASTE	700.58	6-01- -008-253 REFUSE COLLECTION & REMOVAL	Budget			19	1

Check #	Check Date	Vendor	PO #	Item	Description	Amount Paid	Charge Account	Account Type	Reconciled/Void	Contract	Ref Num	Ref Seq	Acct
CURRENT					Continued								
57259		MAZZA RECYCLING SERVICES, LTD. Continued											
			26-02042	2	COMMINGLED INCOMING	107.80	6-01- -024-462 DROP OFF CENTER	Budget				20	1
						808.38							
57260	10/26/26	MGL F MGL PRINTING SOLUTIONS									13695		
			26-02066	1	MIN. BOOK-BT LEGAL 500 PG	588.00	6-01- -001-201 GENERAL OFFICE SUPPLIES	Budget				29	1
			26-02066	2	14" FILLER SHEET 250/PK	410.00	6-01- -001-201 GENERAL OFFICE SUPPLIES	Budget				30	1
			26-02066	3	SHIPPING	44.00	6-01- -001-201 GENERAL OFFICE SUPPLIES	Budget				31	1
						1,042.00							
57261	10/26/26	MIDATLAN AT NORTHERN NEW JERSEY LLC									13695		
			26-02035	1	VARIOUS PARTS	280.91	6-01- -027-256 MAINT. & REPAIRS EQUIPMENT	Budget				15	1
57262	10/26/26	MONTR JOHN GUIRE SUPPLY, LLC									13695		
			26-02039	1	FERRIS WHEEL ASSEMBLY/PARTS	792.78	6-01- -027-223 TIRES, RIMS, CHAINS	Budget				18	1
57263	10/26/26	MRJOHN UNITED SITE SERVICES INC.									13695		
			26-02079	1	POLICE RANGE RESTROOM-SEPT2026	65.63	6-01- -027-255 RENTALS & LEASES	Budget				33	1
			26-02080	1	PARK RENTALS 9/1/26 - 9/30/26	1,581.04	6-01- -027-255 RENTALS & LEASES	Budget				34	1
						1,646.67							
57264	10/26/26	OMAHA OMAHA STANDARD, INC.									13695		
			26-02038	1	SADDLE/CYLINDER PIN	459.04	6-01- -027-256 MAINT. & REPAIRS EQUIPMENT	Budget				17	1
57265	10/26/26	RUSSOSEA RUSSO SEAMLESS GUTTER, LLC									13695		
			26-02053	1	GARAGE DOOR WRAPPING (6)	6,870.00	6-01- -027-233 MAINT & REPAIRS OF FACILITY	Budget				28	1
57266	10/26/26	SEABO SEABOARD WELDING SUPPLY INC.									13695		
			26-02045	1	ACETYLENE/OXYGEN	250.30	6-01- -027-226 CHEMICALS & GASES	Budget				25	1
57267	10/26/26	STAPE STAPLES ADVANTAGE									13695		
			26-02033	1	OFFICE SUPPLIES	87.98	6-01- -017-201 GENERAL OFFICE SUPPLIES	Budget				10	1
			26-02033	2	OFFICE SUPPLIES	84.48	6-01- -017-203 COPY MACHINE SUPPLIES	Budget				11	1
			26-02033	3	OFFICE SUPPLIES	27.98	6-01- -017-233 MAINT & REPAIRS OF FACILITY	Budget				12	1
			26-02033	4	OFFICE SUPPLIES	46.61	6-01- -017-291 OFFICE EQUIP. & FURNITURE	Budget				13	1
						247.05							

Check #	Check Date	Vendor	PO #	Item	Description	Amount Paid	Charge Account	Account Type	Reconciled/Void	Contract	Ref Num	Ref Seq	Acct
CURRENT					Continued								
57268	10/26/26	STOUTS			STOUT'S CHARTER SERVICE INC.						13695		
	26-02018			1	LANCASTER SENIOR TRIP DEPOSIT	1,480.00	6-01- -023-241 CONTRIBUTIONS TO SENIOR CITIZENS	Budget			4	1	
57269	10/26/26	TASC			TASC FIRE APPARATUS, INC.						13695		
	26-02037			1	SMALL ENGINE FUEL	1,150.00	6-01- -027-256 MAINT. & REPAIRS EQUIPMENT	Budget			16	1	
57270	10/26/26	TEAML			TEAM LIFE, INC						13695		
	26-02078			1	AED - LAIRD ROAD SNACK SHED	1,823.00	6-01- -023-233 MAINT & REPAIRS OF FACILITY	Budget			32	1	
57271	10/26/26	ZEP			ZEP SALES & SERVICE						13695		
	26-01817			1	TRUCK SOAP - FIRE CO.#1	1,203.50	6-01- -015-452 FIRE BUDGET	Budget			1	1	

Checking Account Totals	Paid	Void	Amount Paid	Amount Void
Checks:	57	0	145,856.28	0.00
Direct Deposit:	0	0	0.00	0.00
Total:	57	0	145,856.28	0.00

CURWIRE	CURRENT WIRES											
102926	10/21/26	JCPL8			JCP&L/REMITTANCE PROCES. CTR					13687		
	26-02013		1		A/C#100009669621/FIRST AID BLD	385.80	6-01- -018-421 CONTRIBUTIONS TO FIRST AID	Budget		1	1	
101926	10/23/26	JCPL8			JCP&L/REMITTANCE PROCES. CTR					13694		
	26-02062		1		A/C#100113623613/BLKLT1 CRINE	78.46	6-01- -029-481 STREET LIGHTING	Budget		1	1	
	26-02062		2		A/C#100043432697/CLOVER HILL	8.07	6-01- -029-481 STREET LIGHTING	Budget		2	1	
	26-02062		3		A/C#100056437146/PHALANX RD	40.55	6-01- -029-481 STREET LIGHTING	Budget		3	1	
	26-02062		4		A/C#100054002884/MULENBRINK RD	11.30	6-01- -029-481 STREET LIGHTING	Budget		4	1	
	26-02062		5		A/C#100025223262/LIBRARY	426.70	6-01- -043-272 ELECTRIC	Budget		5	1	
						565.08						
102226	10/23/26	CIGNA			CIGNA					13694		
	26-02027		1		MEDICAL BILL - OCTOBER 2026	112,512.41	6-01- -014-401 MEDICAL	Budget		6	1	
102626	10/23/26	JCPL8			JCP&L/REMITTANCE PROCES. CTR					13694		
	26-02061		1		A/C#100009473107-J984FIVEPOINT	84.86	6-01- -034-803 ELECTRICITY-BUILDINGS & GROUND	Budget		7	1	
102726	10/23/26	JCPL8			JCP&L/REMITTANCE PROCES. CTR					13694		
	26-02063		1		A/C#100055469223/MONTROSE	16.10	T-04- -024-201 MISCELLANEOUS EXPENSES	Budget		8	1	
	26-02063		2		A/C#100075243392/FIVE PT PARK	254.44	6-01- -029-481 STREET LIGHTING	Budget		9	1	

Check # / Check Date / Vendor / PO #	Item	Description	Amount Paid	Charge Account	Account Type	Reconciled/Void / Contract	Ref Num / Ref Seq	Acct
CURWIRE CURRENT WIRES Continued								
102726 JCP&L/REMITTANCE PROCES. CTR Continued								
26-02063	3	A/C#100149896688/124 CEDAR DR	198.78	6-01- -034-803 ELECTRICITY-BUILDINGS & GROUND	Budget		10	1
26-02063	4	AC#100068841202/FLAGPOLE LIGHT	232.14	6-01- -029-481 STREET LIGHTING	Budget		11	1
			701.46					
102826 10/23/26 JCPL8 JCP&L/REMITTANCE PROCES. CTR							13694	
26-02073	1	A/C#100139455727-DPW 231A RT34	37.73	6-01- -034-803 ELECTRICITY-BUILDINGS & GROUND	Budget		12	1
26-02073	2	A/C#100074037506-BL 48 LOT 2	112.65	6-01- -029-481 STREET LIGHTING	Budget		13	1
			150.38					

Checking Account Totals	Paid	Void	Amount Paid	Amount Void
Checks:	6	0	114,399.99	0.00
Direct Deposit:	0	0	0.00	0.00
Total:	6	0	114,399.99	0.00

ESC								
2370 10/20/26 BANISCH BANISCH ASSOCIATES, INC.							13685	
ESC06618	1	PROFESSIONAL PLANNING SERVICES	1,793.75	CNBSPECIAL CN BUILD ASSOC,SPECIAL MASTER	Project		1	1
2371 10/22/26 MICH1 MICHAEL B. STEIB, P.A.							13690	
ESC06619	1	PROFESSIONAL SERVICES PB #703D	663.00	ORCHPB703D ORCHARD SHOPPING CENTER	Project		1	1
ESC06619	2	PROFESSIONAL SERVICES PB #754	612.00	CHURCH754B CN COMMUNITY CHURCH	Project		2	1
ESC06619	3	PROFESSIONAL SERVICES PB #768	170.00	SCIANPB768 ANTHONY SCIANDRA PB#768 MINOR	Project		3	1
ESC06619	4	PROFESSIONAL SERVICES ZB #2005	34.00	COSTZB2005 PEDRO COSTA - ZB# 2005 VAR	Project		4	1
ESC06619	5	PROFESSIONAL SERVICES ZB #2038	561.00	BREWZB2038 SOURCE BREWERY - ZB# 2038 VAR	Project		5	1
ESC06619	6	PROFESSIONAL SERVICES ZB #2065	153.00	PUTEZB2065 ROBERT PUTERMAN ZB#2065 VARIAN	Project		6	1
ESC06619	7	PROFESSIONAL SERVICES ZB #2071	153.00	DAGZB2071 JAMIE D'AGOSTINO ZB2071	Project		7	1
ESC06619	8	PROFESSIONAL SERVICES ZB #2074	459.00	DEPUZB2074 DEPUTY VENTURES, LLC	Project		8	1
ESC06619	9	PROFESSIONAL SERVICES ZB #2077	153.00	MESSZB2077 MESSINA ZB#2077	Project		9	1
ESC06619	10	PROFESSIONAL SERVICES ZB #2080	153.00	FUTEZB2080 FUTERMAN #2080	Project		10	1
ESC06619	11	PROFESSIONAL SERVICES ZB #2085	102.00	MOLLZB2085 MOLL	Project		11	1
ESC06619	12	PROFESSIONAL SERVICES ZB #2086	119.00	ZAPZB2086 ZAPATA	Project		12	1

Check #	Check Date	Vendor	PO #	Item	Description	Amount Paid	Charge Account	Account Type	Reconciled/Void	Ref Num	Contract	Ref Seq	Acct
ESC					Continued								
2371		MICHAEL B. STEIB, P.A.			Continued								
			ESC06619	13	PROFESSIONAL SERVICES ZB #2087	68.00	STANZB2087 STANIFORTH	Project				13	1
						3,400.00							
2372	10/23/26	T M			T & M ASSOCIATES					13691			
			ESC06620	1	PROFESSIONAL SERVICES INSP#743	3,916.00	CNBINSP743 CN BUILDING ASSOC -PB#743 INSP	Project				1	1
			ESC06620	2	PROFESSIONAL SERVICES	1,691.00	CMPB753A CHARLESTON MEADOWS PB#753A INS	Project				2	1
			ESC06620	3	PROFESSIONAL SERVICES	11,487.00	CNRCIN1053 CN REFORMED CHURCH INSPECTION	Project				3	1
			ESC06620	4	PROFESSIONAL SERVICES PB #703D	667.50	ORCHPB703D ORCHARD SHOPPING CENTER	Project				4	1
			ESC06620	5	PROFESSIONAL SERVICES PB #767	756.50	440RTPB767 440 RT34 PARKING LOT- PB767	Project				5	1
			ESC06620	6	PROFESSIONAL SERVICES	400.50	STREETOPEN STREET OPENING APPLICATION FEE	Project				6	1
			ESC06620	7	PROFESSIONAL SERVICES	467.50	GRADREVIEW GRADING PLAN REVIEW	Project				7	1
						19,386.00							

Checking Account Totals	Paid	Void	Amount Paid	Amount Void
Checks:	3	0	24,579.75	0.00
Direct Deposit:	0	0	0.00	0.00
Total:	3	0	24,579.75	0.00

GRANT1		GRANT CHECKING ACCOUNT											
2817	10/26/26	CNHS	NAT CNHS NATIONAL HONOR SOCIETY							13697			
			26-02044	1	ROAD CLEAN-UP:SCHOOL RD EAST	500.00	G-03- -155-202 MISCELLANEOUS	Budget				1	1

Checking Account Totals	Paid	Void	Amount Paid	Amount Void
Checks:	1	0	500.00	0.00
Direct Deposit:	0	0	0.00	0.00
Total:	1	0	500.00	0.00

TRU		TRUST ACCOUNT											
2613	10/26/26	BUCKE	BUCKET SUPPLY & EQUIPMENT							13698			
			26-02064	1	PLOW BOLTS/WASHERS/NUTS	5,125.90	T-04- -015-217 SNOW REMOVAL/STORM DAMAGE-DED BY RIDER	Budget				1	1

Checking Account Totals	Paid	Void	Amount Paid	Amount Void
Checks:	1	0	5,125.90	0.00
Direct Deposit:	0	0	0.00	0.00
Total:	1	0	5,125.90	0.00

Check #	Check Date	Vendor	PO #	Item	Description	Amount Paid	Charge Account	Account Type	Reconciled/Void	Contract	Ref Num	Ref Seq	Acct

TRU TRUST ACCOUNT Continued

Report Totals

	Paid	Void	Amount Paid	Amount Void
Checks:	73	0	311,080.38	0.00
Direct Deposit:	0	0	0.00	0.00
Total:	73	0	311,080.38	0.00

Totals by Year-Fund Fund Description	Fund	Budget Total	Revenue Total	G/L Total	Total
CURRENT FUND	6-01	254,047.13	0.00	0.00	254,047.13
CAPITAL FUND	C-02	20,396.61	0.00	0.00	20,396.61
FEDERAL & STATE GRANTS	G-03	500.00	0.00	0.00	500.00
TRUST	T-04	11,556.89	0.00	0.00	11,556.89
Total Of All Funds:		286,500.63	0.00	0.00	286,500.63

Project Description	Project No.	Project Total
440 RT34 PARKING LOT- PB767	440RTPB767	756.50
SOURCE BREWERY - ZB# 2038 VAR	BREWZB2038	561.00
CN COMMUNITY CHURCH	CHURCH754B	612.00
CHARLESTON MEADOWS PB#753A INS	CMPB753A	1,691.00
CN BUILDING ASSOC -PB#743 INSP	CNBINSP743	3,916.00
CN BUILD ASSOC,SPECIAL MASTER	CNBSPECIAL	1,793.75
CN REFORMED CHURCH INSPECTION	CNRCIN1053	11,487.00
PEDRO COSTA - ZB# 2005 VAR	COSTZB2005	34.00
JAMIE D'AGOSTINO ZB2071	DAGZB2071	153.00
DEPUTY VENTURES, LLC	DEPUZB2074	459.00
FUTERMAN #2080	FUTEZB2080	153.00
GRADING PLAN REVIEW	GRADREVIEW	467.50
MESSINA ZB#2077	MESSZB2077	153.00
MOLL	MOLLZB2085	102.00
ORCHARD SHOPPING CENTER	ORCHPB703D	1,330.50
ROBERT PUTERMAN ZB#2065 VARIAN	PUTEZB2065	153.00
ANTHONY SCIANDRA PB#768 MINOR	SCIANPB768	170.00
STANIFORTH	STANZB2087	68.00
STREET OPENING APPLICATION FEE	STREETOPEN	400.50
ZAPATA	ZAPZB2086	119.00
Total Of All Projects:		24,579.75

ORDINANCE #2026-18

AN ORDINANCE AMENDING AND SUPPLEMENTING CHAPTER 102, "DEVELOPMENT REGULATIONS" OF THE CODE OF THE TOWNSHIP OF COLTS NECK, ARTICLE VIII, "ZONING REQUIREMENTS," "PART 4. ZONING AND DESIGN REQUIREMENTS FOR RESIDENTIAL DISTRICTS," SECTION 102-85.4, "A-10 OVERLAY RESIDENTIAL DISTRICT" UNDER PROTEST

Block 11, Lot 3.02 (151 Dutch Lane Road)

WHEREAS, on March 20, 2024, Governor Murphy signed P.L.2024, c.2 into law, establishing a new framework for determining and enforcing municipalities' affordable housing obligations under the New Jersey Supreme Court's Mount Laurel doctrine and the New Jersey Fair Housing Act (the "FHA") (N.J.S.A. 52:27D-301 et al.); and

WHEREAS, the Amended FHA requires the Department of Community Affairs ("DCA") to calculate the Fourth Round Present and Prospective Need Obligation of municipalities within the state and establishing the New Jersey Affordable Housing Dispute Resolution Program; and

WHEREAS, pursuant to the FHA, Administrative Directive No. 14-24, and Resolution No. 2025-43, the Township filed a Declaratory Judgment Action under Docket Number MON-L-422-25 seeking approval and confirmation by the Affordable Housing Alternative Dispute Resolution Program (the "Program") of its affordable housing obligations;

WHEREAS, on March 27, 2025, the Hon. Linda Grasso Jones, J.S.C. issued an order finding in favor of the Township's identified affordable housing obligation and authorizing the Township to proceed with preparation and adoption of a Fourth Round Housing Element and Fair Share Plan by June 30, 2025;

WHEREAS, the Township's Planning Board adopted the Fourth Round Housing Element and Fair Share Plan ("Fourth Round HEFSP") on June 9, 2025, which was endorsed by the Township Committee on June 11, 2025; and

WHEREAS, the Township submitted the Fourth Round HEFSP to the Program in accordance with the FHA and Directive #14-24; and

WHEREAS, on August 28, 2025 and September 2, 2025, Fair Share Housing Center, Active Acquisitions, LLC and 68 Obre Owner LLC filed challenges to the Fourth Round HEFSP; and

WHEREAS, on March 4, 2026, the Program issued its Decision Recommendation Housing Element and Fair Share Plan: Denial of Certification of Compliance Pending Action by Township ("Program Decision Recommendation") whereby it found that the Fourth Round HEFSP does not comply with the FHA and the Mount Laurel Doctrine and ordered that to maintain immunity and receive a Certification of Compliance the Township must adopt an Amended HEFSP designating the properties located at 68 Obre Road (Block 50, Lot 7), 318-22 Route 537 (Block 48, Lots 25.01, 26 & 27), and 151 Dutch Lane (Block 11, Lot 3.02) for inclusionary zoning by April 8, 2026 and adopt enabling zoning ordinances to permit development of the three (3) projects proposed by 68 Obre Owner LLC and Active Acquisitions, LLC by May 13, 2026; and

WHEREAS, on March 9, 2026, the Hon. Linda Grasso Jones, J.S.C. entered an Order accepting the Program Decision Recommendation and ordering the Township to adopt an Amended HEFSP by April 8, 2026 and the enabling zoning ordinances by May 13, 2026 ("March 9 Order"); and

WHEREAS, in accordance with the March 9 Order, Colts Neck Township Planning Board, under protest, adopted on April 7, 2026 an Amendment to the Fourth Round HEFSP in compliance with the March 9 Order and as meeting the requirements of N.J.S.A. 40:55D-28 and N.J.S.A. 52:27D-310, which was endorsed, under protest, by the Township Council on April 8, 2026; and

WHEREAS, on June 23, 2026, the Hon. Linda Grasso Jones, J.S.C. entered an order (the "June 23 Order") providing as follows in relevant part:

It is anticipated that issues involving the 68 Obre Owner, LLC site will be resolved prior to the August 12, 2026 Township Committee meeting, and resolution of issue(s) involving development by 68 Obre Owner will be addressed with adoption of a resolution by the governing body at that meeting.

The Township and Active Acquisitions, LLC will continue their discussions regarding the potential for development by Active Acquisitions within Colts Neck.

Immunity from Round IV builder's remedies suits continues to be extended to Colts Neck through September 17, 2026

; and

WHEREAS, in light of the foregoing, and to comply with the March 9 Order consistent with the terms of the June 23 Order, the Township Committee seeks to rezone the property located at Block 11, Lot 3.02 (151 Dutch Lane Road) to permit the development of the inclusionary project proposed by Active Acquisitions LLC; and

WHEREAS, the Township adopts this re-zoning ordinance for Block 11, Lot 3.02 (151 Dutch Lane Road) under protest as directed by the March 9 Order and with the intent to appeal the Program Decision Recommendation and the March 9 Order once the matter is deemed final for appellate purposes and it reserves all rights and positions in connection with any appeal, and based upon the same, any applicant intending to pursue land use approvals in conjunction with this rezoning shall be on notice that the submission of such an application or the granting of any land use approvals prior to a final non-appealable adjudication of an appeal of the Program Decision Recommendation and the March 9 Order shall be contingent upon resolution of such appellate practice.

NOW, THEREFORE, BE IT ORDAINED, by the Township Committee of Colts Neck Township, Monmouth County, New Jersey, that the Code of the Township of Colts Neck is hereby amended, under protest, as follows:

SECTION 1. Chapter 102, "Development Regulations," Article VIII, "Zoning Requirements," Section 102-85.4 "A-10 Overlay Residential District," shall be amended and supplemented as follows:

Section 102-85.4(C) – A-10 Overlay Residential District

A. Under protest, the Township adopts this re-zoning ordinance for Block 11, Lot 3.02 (151 Dutch Lane Road) as directed by the March 9 Order. The Township is rezoning the site as directed by the Program Decision Recommendation and March 9 Order. The Township reserves the right, and expresses its intent, to exercise an appeal from these orders once the matter is deemed final, pursuant to its statutory right under N.J.S.A. 52:27D-304.1 and in turn Administrative Directive #14-24. Any land use approvals sought pursuant to this Ordinance prior to the exhaustion of appellate practice shall be made contingent upon a final non-appealable adjudication.

B. Purpose. The purpose of the A-10 Residential District is to create the opportunity for the development of an inclusionary affordable housing project in accordance with the March 9 Order. It is the intent of this ordinance to permit an inclusionary residential development of up to 389 dwelling units provided that 20 percent of the units are set-aside, affordable to and occupied by, very-low, low and moderate income households.

C. Principal permitted uses on land and in buildings. The following shall be permitted as principal uses:

(1) Townhouses.

(2) Stacked townhouses containing not more than 3 dwellings each.

(3) Agricultural uses.

(4) Conservation areas and open space.

(5) Multiple principal uses and principal buildings shall be permitted on the tract.

A. Accessory uses. The following shall be permitted as accessory uses (subject to §§ 102-48 and 102-87, except as stated herein.):

(1) Off-street parking facilities and parking lots.

(2) Mailboxes, lampposts, flagpoles, driveways, paths, sidewalks.

(3) Common facilities and amenities including: tot lots, clubhouse with a fitness center and reception facilities, swimming pools, hot tubs, grilling stations and other on-site recreational areas and facilities, common walkways, gazebos, sitting areas, picnic areas and gardens, and other similar uses.

(4) Patios, decks, terraces, and balconies.

(5) Fences and walls. See §102-57 and §102-73 for requirements.

(6) Satellite dishes and solar energy panels. Ground mounted solar energy panels shall be screened from view of public streets and neighboring properties by screening, planting, fencing or a combination of these techniques, in order to provide proper screening after 2 growing seasons. Roof mounted solar energy panels shall be mounted flush, or nearly flush, with building sides or roofs.

(7) Bike racks

(8) Signs.

(9) Emergency generators.

(10) Utility structures, including but not limited to, stormwater management basins and facilities, pump stations, on-site waste treatment facilities, wells, junction boxes, and the like. Existing stormwater management basins and facilities may be utilized in new development.

(11) Maintenance building and pump station maintenance building, not to exceed 1,500 square feet of coverage each and 25 feet in height.

(12) Temporary construction and sales trailers. See §102-80 for requirements.

(13) Other uses which are customarily incidental to a permitted principal use.

A. Housing types.

(1) Residences may be family housing and/or restricted as senior housing to those 55 years or older.

(2) Not more than 80% of the total dwellings may be stacked townhouses.

(3) Stacked townhouses shall not be located along a tract boundary shared with an off-tract single-family home. This requirement shall not apply to off-tract single-family homes located across a public street or to stacked townhouses located 300 feet or more from the tract boundary.

B. Tract Area. The term "tract", as applied to the A-10 Overlay Residential District shall be defined as the entirety of the property in the A-10 Overlay Residential District.

C. Affordable housing.

(1) In accordance with the Fair Housing Act, and the Uniform Housing Affordability Controls ("UHAC", N.J.A.C. 5:80-26.1), and the Township's affordable housing regulations (§102-97.1), 20% of all residential dwelling units built within this district shall be set aside for very-low, low, and moderate income households. Should there be any conflict between the Township ordinance and UHAC, the UHAC standard shall apply.

(2) At least half of the affordable units shall be affordable to very low and low income households; and the remaining affordable units shall be affordable to moderate income households. The very low income units shall equal at least 13% of the total

affordable units. A typical percentage of affordable housing shall be 13% very low, 37% low and 50% moderate income units.

(3) Each rental affordable dwelling unit shall be deed restricted for at least 40 years from the date of initial occupancy of the unit, as set forth in UHAC (N.J.A.C. 5:8-26.12.). Each for-sale affordable unit shall be deed-restricted for at least 30 years from the date of initial occupancy of the unit, as set forth in UHAC (N.J.A.C. 5:8-26.6.).

A. Bulk, area, and building requirements.

Requirements	**Standard**
Minimum tract area	30 acres
Minimum tract frontage	1,100 feet
Maximum dwelling units	389
Minimum width of townhouse or stacked townhouse	20 feet
Minimum setbacks	
Principal building	
Setback from Dutch Lane Road	100 feet
Setback from other tract boundaries	75 feet
Setback from internal roads	20 feet
Setback from parking (excluding driveway spaces)	10 feet
Minimum distance between principal buildings	
Side to side	15 feet
Side to rear	30 feet
Rear to rear	30 feet
Maximum dwellings per building	
Townhouses	8
Stacked townhouses	18
Maximum building height	
Townhouses	3 stories / 45 feet
Stacked townhouses	3 stories / 45 feet
Clubhouse	1 story / 30 feet
Accessory buildings, excluding clubhouse	1 story / 20 feet
Maximum lot coverage (coverage of tract)	60%

B. Building height.

(1) The term "building height" shall be defined as follows: The vertical distance measured to the highest point of a building from the average finished grade,

measured at five-foot intervals along and five feet away from the foundation along the side(s) of the building facing a street.

C. Minimum open space. A minimum of 30% of the tract shall be open space, defined for this purpose as lands consisting of common open space, undevelopable environmentally constrained areas (wetlands and associated buffers, etc.), tract buffers, stormwater facilities, and park areas.

D. Maintenance buildings. Maintenance buildings may be subdivided from the tract with a maximum lot size of 6,000 s.f. The building design shall be complementary to the surrounding on-tract buildings.

E. Accessory buildings and structures.

(1) Accessory buildings and structures, attached or detached from the principal building, are not permitted in the tract setbacks. This shall not apply to utility structures, site entrance, stormwater management and drainage facilities, or permitted project identification signs.

(2) Accessory buildings or structures as part of principal buildings. Any accessory buildings or structures attached to a principal building or structure shall, for purposes of determining yard requirements only, be considered part of the principal building, and the total structure shall adhere to the yard requirements for the principal building regardless of the technique of connecting the principal and accessory buildings or structures. The above shall also apply to a ground-level patio surfaces adjacent to a building.

(3) Accessory buildings and structures detached from principal buildings, excluding fences, walls, mailboxes, light fixtures or similar structures.

(a) Structures for private residential use (sheds, private pools, etc.) shall not be located in the front yard and shall have a minimum side and rear yard setback of 5 feet.

(b) Minimum setback from roads: 20 feet.

(c) Minimum setback to parking: 10 feet.

F. Tract setback requirements.

(1) Buildings and structures shall not be located within tract setbacks, with the exception of site access, permitted project identification signs, utility structures and stormwater management and drainage facilities.

G. Site access, off-street parking, and loading requirements.

(1) A maximum of 1 site access point each shall be permitted from Dutch Lane Road and Boundary Road. Driveways serving individual buildings, townhouses or stacked townhouses are prohibited from Dutch Lane Road and Boundary Road.

(2) A minimum of 20 feet shall be provided for any private driveway depth, measured from the garage to the sidewalk or cartway, as may be applicable.

(3) The number of parking spaces and roadway standards shall be consistent with the requirements of N.J.A.C. 5:21-1.1 et seq., known as the Residential Site Improvements Standards ("RSIS").

(4) The number of parking spaces required for a club house or amenity space shall be 1 parking space per 500 square feet of gross floor area.

(5) No loading spaces are required.

H. Landscape and fencing requirements.

(1) Landscaping and plantings shall be provided pursuant to §102-71., except as stated herein.

(2) Shade trees shall be planted with average spacing of one tree every 55 feet along all public and private streets. Shade trees shall be a maximum of 15 feet from the curbline.

(3) To enhance privacy and screening, a row of trees, consisting of evergreen, shade and ornamental trees, shall be planted along the rear yard of any residential

building, excluding those whose rear yard directly abuts a tract boundary. The trees shall be planted with average spacing of one tree every 30 feet and may be clustered.

(4) Landscape buffers.

(a) A 50 foot landscaped buffer shall be provided along the Dutch Lane Road and Boundary Road frontages. and horizontal variation is encouraged within the landscape buffer. A planted berm of 5 to 7 feet in height shall be provided within the landscape buffer and/or tract boundary. A planted berm shall not be required where the distance of the road to a building in the district exceeds 300 feet. The berm shall have gently curving, naturalistic forms with vertical and horizontal variation. Berm slopes shall not exceed 3:1, with an average slope of between 4:1 and 5:1. The berm shall include a variety of plant materials with a predominance of evergreen trees planted generally along the ridge to maximize the buffer screening. Existing vegetation may satisfy all or a portion of this requirement where it provides a suitable screen. Existing vegetation may satisfy all or a portion of this requirement where it provides a suitable screen. A berm may utilize a retaining wall, provided the retaining wall does not face an existing street or off tract residence, and shall not exceed 75% of the berm height for which it is associated.

(b) A 40 foot landscaped buffer shall be provided along the side and rear tract boundaries. A planted berm of 4 to 6 feet in height shall be provided within the landscape buffer and/or tract boundary. A planted berm shall not be required where the distance of the applicable tract boundary to a building in the district exceeds 300 feet. The berm shall have gently curving, naturalistic forms with vertical and horizontal variation. Berm slopes shall not exceed 3:1, with an average slope of between 4:1 and 5:1. The berm shall include a variety of plant materials with a predominance of evergreen trees planted generally along the ridge to maximize the buffer screening. Existing vegetation may satisfy all or a portion of this requirement where it provides a suitable screen. A berm may utilize a retaining wall, provided the retaining wall does not face an existing street or off tract residence, and shall not exceed 75% of the berm height for which it is associated.

(c) The landscaped buffers shall meet the standards set forth in§102-90 except as stated herein. No structures are permitted within the buffer with the exception of site entrances and permitted project identification signs. Up to 10% of each required buffer may be occupied by stormwater management and drainage facilities.

(5) Fences.

(a) Fences shall be provided as per §102-73, except as stated herein.

(b) Fences within tract setbacks shall have a maximum height of 4 feet.

(c) Fences within side and rear yards shall have a maximum height of 6 feet.

(d) Fences within the front yard, or between a property line and the principal building, shall have a maximum height of 4 feet.

I. Lighting requirements.

(1) Section 102-117 shall not apply.

(2) Light fixtures shall have a maximum mounting height of 20 feet.

(3) All lighting shall be shielded to minimize any glare, spillage, or light pollution.

(4) The maximum level of illumination measured at any tract boundary line shall be 0.1 foot candles, except for any ingress or egress driveways, where additional lighting for safety shall be permitted.

(5) All lighting shall be dark sky compliant.

(6) All lighting shall be LED with a maximum color temperature of 3,000 K.

J. Signs.

(1) Except as provided for herein, all signs shall be in accordance with the requirements of § 102-106.

(2) One monument or freestanding project identification sign at each site entrance is permitted in accordance with the following standards:

(a) Signs shall be non-illuminated or externally illuminated.

(b) Signs shall be landscaped and may identify the community project name, developer, and logo.

(c) The maximum sign area containing text and logos shall not exceed 40 square feet for each side of the sign if two-sided.

(d) The maximum sign height, including the structure and sign area, shall not exceed 6 feet.

(e) The minimum sign setbacks shall be 10 feet from the public right-of-way.

(3) Ground mounted wayfinding signs shall be permitted to identify specific locations and/or buildings, areas, or recreational facilities. No sign shall exceed 4 square feet in area and 4.5 feet in height.

(4) Seasonal decorations are permitted in accordance with the requirements of § 102-106C.

K. Ordinance Exceptions.

(1) The inclusionary development shall be exempt from the following sections of the Township code: Section 102-98 (Multifamily Provisions); Section 102-63 (Natural Features); Sections 102-71(C-E) Shade Trees, Wooded Areas and Landscaping; Sections 102-77 (Streets); Section 102-83 (Yards); Section 102-88 (Bikeways); Section 102-94 (Design Standards in Stream Corridors); and Section 102-105 (Slope Regulations).

(2) The inclusionary development shall also be exempt from Section 102-80.1(A-F) (Tree Replacement). The inclusionary development shall be permitted to remove trees, provided that the developer replaces trees with a DBH of 10 inches or more with 2 replacement trees with a DBH of at least 3 inches. Replacement trees required by this section shall be in addition to any other landscaping required in this zone.

(3) Soil Erosion and Sedimentation Control review shall be based on the conclusions of the Freehold Soil Conservation District rather than Section 102-75 of the Colts Neck Ordinance. The review of streets shall be governed by the New Jersey Residential Site Improvement Standards (RSIS), rather than the Colts Neck Ordinance.

L. Conflicts.

(1) To the extent there is a conflict between this ordinance and any other section of the Township's ordinances, this ordinance shall apply. To the extent there is a conflict between this and any other Township ordinances and the New Jersey Uniform Housing Affordability Controls standards (UHAC), the UHAC standards shall apply, subject to any order of the court.

(2) To the extent there is a conflict between this ordinance or any other section of the Township's ordinances and RSIS, RSIS standards shall apply.

SECTION 2. Remainder. Except as hereby amended and supplemented, all other parts of Chapter 102 of the Code of the Township of Colts Neck shall remain in full force and effect.

SECTION 3. Referral to Planning Board. Upon introduction, this Ordinance shall be referred to the Planning Board of the Township of Colts Neck for its review and comment.

SECTION 4. Repealer. All ordinances or parts of ordinances inconsistent or in conflict with this Ordinance are hereby repealed as to said inconsistencies and conflict.

SECTION 5. Severability. If any Section, part of any Section or clause or phrase of this Ordinance is for any reason held to be invalid or unconstitutional, such decision shall not affect the remaining provisions of this Ordinance. The Township Committee of the Township of Colts Neck declares that it would have passed the Ordinance and each Section thereof, irrespective of the fact that any one or more of the subsections, sentences, clauses or phrases may be declared unconstitutional or invalid.

SECTION 6. Effective Date. This Ordinance shall take effect immediately upon final passage and publication according to law.

The foregoing Ordinance was introduced and passed on the first reading at the meeting of the Township Committee of Colts Neck Township on the October 14, 2026 and will be considered for final passage and adoption on October 28, 2026, 6:30 p.m. Town Hall, 1 Veterans Way at which time and place a public hearing will be held for all persons desiring to be heard thereon will be given full opportunity.



Brian O'Malley, RMC
Municipal Clerk

RECORD OF VOTE										
	First Reading					Second Reading				
	October 14, 2026					October 28, 2026				
	M	S	Yes	No	NV	Ab	M	S	Yes	No	NV	Ab
Mayor Viola			X									
Deputy Mayor Buzzetta			X									
Rizzuto		S	X									
Torchia Buss		M	X									
Tobia				X								

M - Moved S - Seconded X - indicates vote NV - Not Voting Ab - Absent

ORDINANCE 2026-24

AN ORDINANCE OF COLTS NECK TOWNSHIP IN THE COUNTY OF MONMOUTH AND THE STATE OF NEW JERSEY AMENDING AND SUPPLEMENTING CHAPTER 102, "DEVELOPMENT REGULATIONS," PART 4 ZONING AND DESIGN REQUIREMENTS FOR RESIDENTIAL DISTRICTS, ARTICLE VIII ZONING REQUIREMENTS, SUBSECTION 102-87 SCHEDULE OF LIMITATIONS: RESIDENTIAL AND AGRICULTURAL OF THE CODE OF COLTS NECK TOWNSHIP.

WHEREAS, ON APRIL 23, 1997, The Colts Neck Township Committee amended in is entirety Chapter 102, Development Regulations of the Code of Colts Neck Township;

WHEREAS, Colts Neck Township is continuously and closely involved in the planning and development process in the Township; and

WHEREAS, one of the purposes of planning is to review the Township's policies and Development Regulations based on best available information and past experiences and to adopt regulations to guide the use of lands in a manner that promotes the public good and general public welfare, and

WHEREAS, a review of the Code has certain errors and omissions regarding the applicability of the "90 foot rule" in the A-5, Rural Residential District and the A-7 Residential District, and

WHEREAS, making clear that footnote No. 1 applies to the A-5 Rural Residential District and the A-7 Residential District will eliminate confusion for the public, staff and enforcement officials, and

WHEREAS, the purposes of this ordinance is to clarify and accurately reflect the intent of the 90 foot rule as originally adopted by the governing body, and

WHEREAS, the Township Committee has determined that adoption of this ordinance confirming the applicability of the "90 foot rule" to the A-5 Rural Residential District and the A-7 Residential District is in the best interest of the health, safety and welfare of the community.

NOW, THEREFORE, BE IT ORDAINED by the Township Committee of the Township of Colts Neck, County of Monmouth, State of New Jersey as follows: (additions to text indicated by underline; deletions to text indicated by ~~strikeout~~).

SECTION 1: That Section 102-87 Schedule of Limitations: residential and agricultural be amended and supplemented in the following parts only.

§ 102-87. Schedule of limitations: residential and agricultural.

[Amended 4-14-1999; 6-9-1999; 11-10-1999; 12-16-2020 by Ord. No. 2020-21; 6-29-2022 by Ord. No. 2022-8]

Schedule of Limitations: Residential and Agricultural

	District						
Type	**A-1**	**A-2**	**A-3**	**A-4**	**A-5**	**AG**	**A-7**
Minimum lot area, interior (square feet)	88,000	40,000	30,000	§ 102-85	220,000	§ 102-86	40,000
Minimum lot area, corner (square feet)	N/A	N/A	35,000	N/A	N/A	N/A	N/A
Minimum lot frontage	300 ft.[1]	200 ft.[1]	150 ft.[1]	§ 102-85[1]	400 ft[1]	§ 102-86[1]	150 feet[1]

Schedule of Limitations: Residential and Agricultural

	District						
Minimum lot width	300 ft.	200 ft.	150 ft.	§ 102-85	400 ft.	§ 102-86	150 feet
Minimum lot depth	200 ft.	175 ft.	150 ft.	§ 102-85	400 ft.	§ 102-86	175 feet
Minimum yards							
Principal buildings (see definitions in § 102-4)							
Front yard	75 ft.[1]	75 ft.[1]	75 ft.[1]	§ 102-85	75 ft.[1]	§ 102-86[1]	75 feet [1]
Side yard (each)	50 ft.[1]	40 ft.[1]	30 ft.[1]	§ 102-85	50 ft.[1]	§ 102-86[1]	40 feet [1]
Rear yard	50 ft.[1]	25 ft.[1]	15 ft.[1]	§ 102-85	50 ft.[1]	§ 102-86[1]	40 feet [1]
Accessory buildings							
Front yard	100 ft.	100 ft.	100 ft.	§ 102-85	100 ft.	§ 102-86	100 feet
Side yard	50 ft./ 25 ft.[3][1]	25 ft.	15 ft.	§ 102-85	50 ft.	§ 102-86	40 feet
Rear yard	50 ft./ 25 ft.[3][2]	25 ft.	15 ft.	§ 102-85	50 ft.	§ 102-86	40 feet
To another building	20 ft.	20 ft.	20 ft.	§ 102-85	20 ft.	§ 102-86	20 feet
For more specific requirements, see § 102-48.							
Maximum building coverage							
Principal buildings							
One-story	10%	10%	10%	§ 102-85	10%	§ 102-86	10%
Two-story	6.6%	6.6%	6.6%	§ 102-85	6.6%	§ 102-86	6.6%
Accessory buildings	5%	5%	5%	§ 102-85	5%	§ 102-86	5%
Maximum lot coverage (see definitions)	20%	20%	30%	40%	20%	§ 102-86	20%
Maximum building height							
Number of stories	2.5	2.5	2.5	§ 102-85	2.5	§ 102-86	2.5
Height	35 ft.	35 ft.	35 ft.	§ 102-85	35 ft.	§ 102-86	35 feet

NOTES:

General notes applicable to all categories:

[a]Where two or more requirements apply to a situation, the more stringent requirement shall apply.

[b]Unless specifically stated otherwise in this chapter, the following may be located in the yard areas required for principal buildings: parking and loading areas with related aisles and driveways; fences and walls not exceeding four feet in height; mailboxes, signs, lampposts, flagposts, wells, septic systems and similar structures. In addition, the following parts of a principal building may extend into

the required yard areas up to a maximum of two feet: chimneys, bay windows, eaves, gutters and downspouts.

[Amended 5-25-2005]

[c]A minimum of 85% of the minimum required lot area or a minimum of 75,000 square feet, whichever is smaller, in all zones must be free of wetlands and associated buffer areas; floodplains; conservation, open space, drainage and right-of-way easements, landscaping easements, drainage easements, special water resource protection areas, scenic viewshed boundary and similar environmental features or encumbrances which restrict development of the property.

[Amended 5-25-2005]

Specific notes applicable where indicated:

[1]Lot frontage; building projection.

[Amended 12-29-1999]

(a) The lot frontage in any residential zone may be reduced to not less than 75% of the required frontage on those lots abutting streets on an outside curve having a centerline radius of 500 feet or less, provided that the resulting subdivision conforms to good subdivision design practices. In the A-1, A-2, A-5, A-7 and AG Zones, if the length of the principal building, projected on the front lot line for building width projection (said line being defined in § 102-4), exceeds 90 feet, the required front, each side and rear yard setback requirements shall be increased one foot for each foot the building projection exceeds 90 feet. In determining whether the principal building projected on the front line for building width projection exceeds 90 feet, the following process shall be utilized:

[Amended 5-25-2005]

[1] Extend the minimum side yard setback on each side to intersect the front lot line.

[2] Connect the two intersecting points created by Subsection [1] above with a straight line and extend beyond the intersection points, as needed, for Subsection [3] below.

[3] Project at a 90º angle to the line created in Subsection [2], a new straight line on each side of the structure and position it so that it touches the outermost portion of the structure.

[4] Measure at right angles the distance between the two lines created in Subsection [3] above. This is the length of the principal building projected on the front lot line.

(b) Figures 1, 2, 3, 4 and 5 are set forth as part of the appendix to Chapter 102 to illustrate this section.[3]

[2]Applies to accessory structures of 150 square feet or less.

[1] *Editor's Note: Applies to accessory structures of 150 square feet or less*
[2] *Editor's Note: Applies to accessory structures of 150 square feet or less*
[3] *Editor's Note: Figures 1 through 5 are* ***included at the end of this chapter.***

SECTION II: Severability.

If any section, paragraph subsection, clause or provision of this ordinance shall be adjudged invalid, such adjudication shall apply only to the section, paragraph, subsection, clause or provision so adjudged and the remainer of this ordinance shall be deemed valid and effective.

SECTION III: Repealer.

The remainder of all other sections and subsections of the aforementioned ordinance not specifically amended by this ordinance shall remain in full force and effect.

SECTION IV: Inconsistent Ordinance.

All ordinances or parts thereof inconsistent with the provisions of this ordinance are hereby repealed as to such inconsistency.

SECTION V: This ordinance shall take effect immediately upon passage, publication and filing according to law.

The foregoing Ordinance was introduced and passed on the first reading at the meeting of the Township Committee of Colts Neck Township on the October 14, 2026 and will be considered for final passage and adoption on October 28, 2026, 6:30 p.m. Town Hall, 1 Veterans Way at which time and place a public hearing will be held for all persons desiring to be heard thereon will be given full opportunity.



Brian O'Malley, RMC
Municipal Clerk

RECORD OF VOTE										
	First Reading					Second Reading				
	October 14, 2026					October 28, 2026				
	M	S	Yes	No	NV	Ab	M	S	Yes	No	NV	Ab
Mayor Viola			X									
Deputy Mayor Buzzetta			X									
Rizzuto		S	X									
Torchia Buss		M	X									
Tobia			X									

M - Moved S - Seconded X - indicates vote NV - Not Voting Ab - Absent

ORDINANCE 2026-25

AN ORDINANCE OF COLTS NECK TOWNSHIP IN THE COUNTY OF MONMOUTH AND THE STATE OF NEW JERSEY AMENDING AND SUPPLEMENTING THE CODE OF THE TOWNSHIP OF COLTS NECK

WHEREAS, the Township is authorized under the laws of the State of New Jersey to enact ordinances and regulations necessary to protect the public health, safety, and welfare of its residents; and

WHEREAS, Appendix D of the International Fire code provides standards for fire apparatus access roads, including requirements related to road width, vertical clearance, turning radius, grade, dead-end roads, and other access features necessary for emergency response operations; and

WHEREAS, adequate fire apparatus access is essential to ensure timely emergency response, enhance fire fighter safety and protect life and property from the hazards of fire and other emergencies; and

WHEREAS, the Township Fire Official and Executive Fire Council have reviewed the provisions of Appendix D and have recommended its adoption as being in the best interest of the Township; and

WHEREAS, the Township Committee has reviewed the provisions of Appendix D, Fire Apparatus Access Roads, of the most recent edition of the International Fire Code; and

WHEREAS, the Township Committee finds that the standards contained in Appendix D of the International Fire Code establishes reasonable and necessary requirements for emergency vehicle access to buildings; and

WHEREAS, the Township Committee further finds that adoption of Appendix D of the International Fire Code will assist emergency responders in carrying out their duties effectively and will reduce risk to life, property, and public welfare.

NOW, THEREFORE, BE IT ORDAINED by the Township Committee of the Township of Colts Neck, County of Monmouth, State of New Jersey as follows: (additions to text indicated by underline; deletions to text indicated by ~~strikeout~~).

SECTION I: That Chapter 29, Fire Prevention Bureau, of the Code of Colts Neck Township be amended and supplemented in the following parts only:

§29-8 ~~Technical Amendments~~ Fire Apparatus Access Roads

Appendix D of the International Fire Code, as amended and supplemented, shall be herein adopted.

SECTION II: That Chapter 102, Development Regulations, Subsection 98, Multifamily provisions be amended and supplemented to add subsections I and J as follows:

§ 102-98 Multifamily provisions

I. Multifamily residential projects having more than 100 dwelling units shall be equipped throughout with a minimum of two separate fire apparatus access roads.

J. Remoteness. Where two fire apparatus access roads are required by I above, they shall be placed a distance apart equal to not less of one-half of the length of the maximum overall diagonal dimension of the property or area to be served measured in a straight line between accesses.

SECTION III: That Chapter 102, Development Regulations, Subsection 109, Business districts be amended and supplemented to add new subsection J entitled "Fire apparatus access" as follows:

§ 102-109 Business districts

J. Fire apparatus access

1. Facilities, buildings or portions of buildings herein constructed shall be accessible to fire department apparatus by way of an approved access road or parking lot access isle with an asphalt, concrete surface capable of supporting the imposed load of five apparatus weighing up to 75,000 pounds.

2. Dead-end fire apparatus access roads or parking lot access isle in excess of 150 feet shall be provided with a turnaround provision in accordance with Figure 109-2 Dead-End Fire Apparatus Access Road Turnaround.

FIGURE 109-2 DEAD-END FIRE APPARTUS ACCESS ROAD TURNAROUND

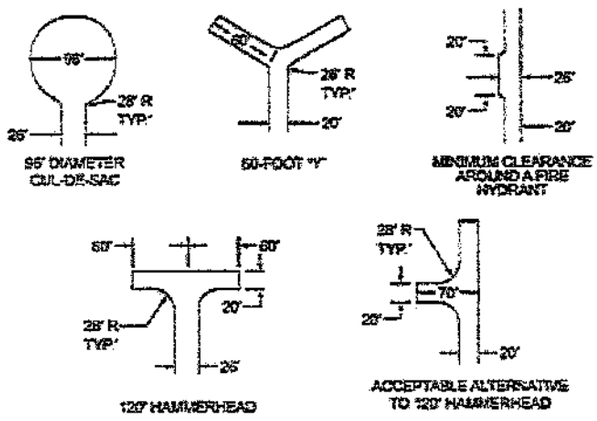

3. Buildings of facilities having a gross floor area of more than 62,000 square feet shall be provided with two separate fire apparatus access roads.

4. Where two fire apparatus access roads are required, they shall be placed a distance apart equal to not less than one-half of the length of the maximum overall diagonal dimension of the lot or area to be served, measured in a straight line between accesses.

SECTION IV: Severability.

If any section, paragraph subsection, clause or provision of this ordinance shall be adjudged invalid, such adjudication shall apply only to the section, paragraph, subsection, clause or provision so adjudged and the remainer of this ordinance shall be deemed valid and effective.

SECTION V: Repealer.

The remainder of all other sections and subsections of the aforementioned ordinance not specifically amended by this ordinance shall remain in full force and effect.

SECTION VI: Inconsistent Ordinance.

All ordinances or parts thereof inconsistent with the provisions of this ordinance are hereby repealed as to such inconsistency.

SECTION VII: This ordinance shall take effect immediately upon passage, publication and filing according to law.

The foregoing Ordinance was introduced and passed on the first reading at the meeting of the Township Committee of Colts Neck Township on the October 14, 2026 and will be considered for final passage and adoption on October 28, 2026, 6:30 p.m. Town Hall, 1 Veterans Way at which time and place a public hearing will be held for all persons desiring to be heard thereon will be given full opportunity.



Brian O'Malley, RMC
Municipal Clerk

RECORD OF VOTE										
	First Reading					Second Reading				
	October 14, 2026					October 28, 2026				
	M	S	Yes	No	NV	Ab	M	S	Yes	No	NV	Ab
Mayor Viola			X									
Deputy Mayor Buzzetta		S	X									
Rizzuto			X									
Torchia Buss		M	X									
Tobia			X									

M - Moved S - Seconded X - indicates vote NV - Not Voting Ab - Absent

ORDINANCE 2026-26

AN ORDINANCE OF THE TOWNSHIP COMMITTEE OF COLTS NECK TOWNSHIP, IN THE COUNTY OF MONMOUTH, STATE OF NEW JERSEY TO VACATE A TOWNSHIP OWNED RIGHT OF WAY ON LAKEVIEW TERRACE

WHEREAS, pursuant to N.J.S.A. 40:67-1(b) and N.J.S.A. 40:67-19, the Township Committee may, by ordinance, vacate any public street or portion thereof, dedicated to public use, but not accepted by the Township, whether or not the same, or any part, has been actually opened or improved; and,

WHEREAS, the Township Committee of Colts Neck Township (the "Township"), is of the opinion that the public interest would be best served by abandoning, vacating, releasing and extinguishing any and all public rights which the Township may have in a portion of Lakeview Terrace (the "right of way") in Colts Neck which is described in detail in the metes and boundaries description attached to this ordinance and made an exhibit to the same as "Exhibit A"; and

WHEREAS, the right of way is bounded by private property which properties and their owners shall be identified and notified of the Township's desire to vacate said right of way in advance of the Ordinance's second reading; and,

WHEREAS, the matter has been referred to the Township Planner, who has recommended that the Township proceed with the vacation since the aforementioned right of way is not needed by the Township for public purposes; and,

WHEREAS, pursuant to N.J.S.A. 40:67-1(b), the Township Committee must, by Ordinance, preserve the right of public utilities to maintain, repair and replace their existing utility facilities, including and sanitary sewer, water or other utilities, in, adjacent to, over, or under the property or right-of-way to be vacated; and,

WHEREAS, N.J.S.A. 40:67-19 authorizes a municipality by ordinance to release and extinguish the public's rights arising from a dedication of a roadway.

NOW, THEREFORE, BE IT ORDAINED, by the Township Committee of Colts Neck Township of Colts Neck Township, in the County of Monmouth and State of New Jersey, as follows:

SECTION 1.

A. The rights of the public and Colts Neck Township in and to that portion of Lakeview Terrace as identified in Exhibit A and herein referred to as "the right of way" are hereby extinguished and vacated, with the exception of the retention of a maintenance and utility easement; and,

B. It is the intent of the Township to vacate the aforementioned interests that the public may have in the property, and to provide that the property shall be conveyed, in its "as is" condition, to the adjoining property owners for no further consideration beyond the costs set forth herein; and,

C. Pursuant to N.J.S.A. 40:67-21, the Township Clerk shall within sixty (60) days after this Ordinance becomes effective file a copy of this Ordinance, certified by him, under the seal of the Township, to be a true copy of such Ordinance, together with a copy of proof of publication, if publication be required, in the office where conveyances of lands are recorded in Monmouth County and such certified copy shall be recorded in a book with proper index to be provided for the purpose and entitled "Vacations."

D. At least seven (7) days prior to the time fixed for the consideration of this Ordinance for final passage, a copy of this Ordinance, together with a notice of its introduction and the time and place when and where the Ordinance will be further considered for final passage, shall be given by the Township Clerk to the owners of all real property, as shown on the current tax map duplicates, to be located within 200 feet in all directions of the right of way. At least ten (10) days prior to the time fixed for the consideration of this Ordinance for final passage, a copy of this Ordinance, together with the notice of its introduction and the time and place when and where the Ordinance will be further considered for final passage, shall be published on the Township's website dedicated to legal notices. This is the notice required by N.J.S.A. 40:67-19, N.J.S.A. 40:49-6, and N.J.S.A. 35:3-2.

SECTION 2. Severability

If any section, paragraph, subsection, clause, or provision of this ordinance shall be adjudged invalid, such adjudication shall apply only to the section, paragraph, subsection, clause or provision so adjudged and the remainder of this ordinance shall be deemed valid and effective.

SECTION 3. Repealer.

The remainder of all other sections and subsections of the aforementioned ordinance not specifically amended by this ordinance shall remain in full force and effect.

SECTION 4. Inconsistent Ordinance

All ordinances or parts thereof inconsistent with the provisions of this ordinance are hereby repealed as to such inconsistency.

SECTION 5.

This ordinance shall take effect immediately upon passage, publication and filing according to law.

The foregoing Ordinance was introduced and passed on the first reading at the meeting of the Township Committee of Colts Neck Township on the October 28, 2026 and will be considered for final passage and adoption on November 12, 2026, 6:30 p.m. Town Hall, 1 Veterans Way at which time and place a public hearing will be held for all persons desiring to be heard thereon will be given full opportunity

_____

Brian O'Malley, RMC
Municipal Clerk

RECORD OF VOTE										
	First Reading					Second Reading				
	October 28, 2026					November 12, 2026				
	M	S	Yes	No	NV	Ab	M	S	Yes	No	NV	Ab
Mayor Viola												
Deputy Mayor Buzzetta												
Rizzuto												
Torchia Buss												
Tobia												

M - Moved S - Seconded X - indicates vote NV - Not Voting Ab - Absent

BAY POINT
SURVEYING

2150 Route 35 Suite 250
Sea Girt, NJ 08750
732-749-8999
info@baypointsurveying.com
www.baypointsurveying.com

PROPERTY DESCRIPTION OF
TAX LOT 18, BLOCK 16
TOWNSHIP OF COLTS NECK
COUNTY OF MONMOUTH
STATE OF NEW JERSEY

Date: September 8,2026

ALL that certain lot, tract or parcel of land, situate in the Township of Colts Neck, County of Monmouth, State of New Jersey, being known as Tax Lot 18, Block 16 as shown on the Tax Map of the Township of Colts Neck and being described as follows:

ALSO known and legally described as Lot 2 in Block 16-5 as shown on a map entitled, "Map of Green Hills, Township Of Colts Neck, Monmouth County, New Jersey", scale 1" =60', dated November 3, 1962 filed as case number 45-30 on 07-08-1963 in the Monmouth County Clerk's office.

BEGINNING at a point in the Easterly line of Lakeview Terrace (50 foot wide right of way) said point being 200.00 feet South of the intersection formed by said Easterly line and Southerly line of Green Hill Road (50 foot right of way) and running; thence,

1) North 83° 19' 50" East, 400.00 feet to a point; thence
2) South 06° 40' 10" East, 155.54 feet to a point; thence
3) South 67° 20' 50" West, 161.45 feet to a point; thence
4) South 83° 19' 50" West, 244.79 feet to a point of curvature in the in said Easterly line Lakeview Terrace; thence
5) On a Curve to the left, along said Easterly line, An arc distance of 167.11 feet, with a radius of 57.00 feet, a chord length of 113.87 feet, and a chord bearing of North 60° 39' 27" West, to a point of reverse curvature; thence
6) Continuing along said Easterly line on a curve to the right, An arc distance of 20.41 feet, with a radius of 15.00 feet, a chord length of 18.87 feet, and a chord bearing of North 45° 38' 57" West, to a point of tangency; thence
7) Continuing along said Easterly line, North 06° 40' 10" West, 72.58 feet to the point or place of beginning.

CONTAINING an area of 71,411 square feet or 1.639 acres

This description is written in conjunction with and is depicted on a map entitled, "Boundary Survey and Proposed Right of Way Vacation Exhibit Tax Lot 18, Block 16, Township of Colts Neck, County of Monmouth, State of New Jersey", scale 1" = 20', dated September 8, 2026, prepared by Bay Point Surveying, PC

Date

James I. Schack
Professional Land Surveyor
New Jersey License #24GS04339600

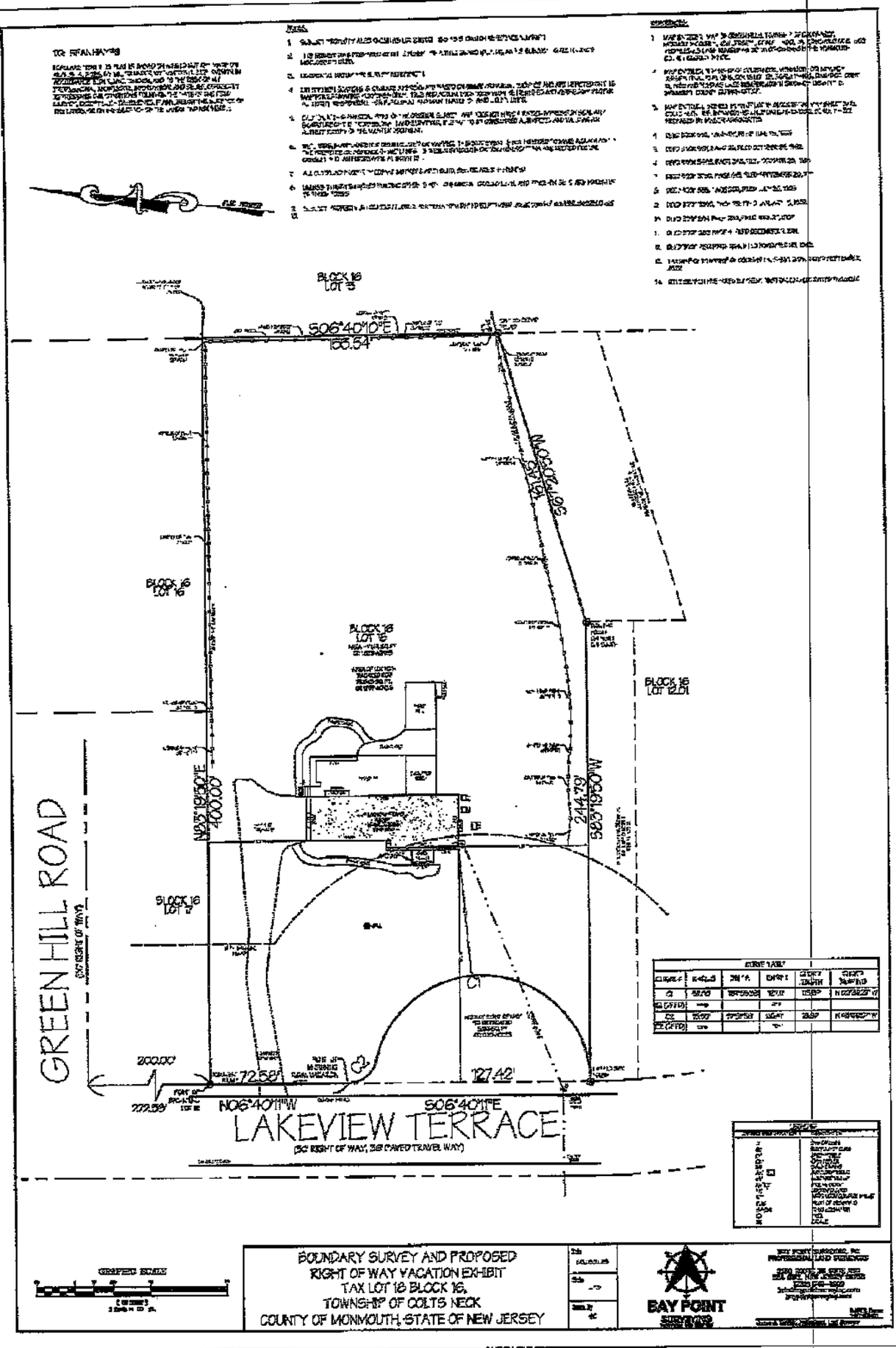
BLOCK 16
LOT 13
S06°40'10"E
166.54'
BLOCK 16
LOT 16
BLOCK 16
LOT 16
BLOCK 16
LOT 12.01
N83°19'50"E
400.00'
244.79'
S83°19'50"W
BLOCK 16
LOT 17
GREEN HILL ROAD
(50' RIGHT OF WAY)
200.00'
72.58'
127.42'
N06°40'11"W
S06°40'11"E
LAKEVIEW TERRACE
(50' RIGHT OF WAY, 36' PAVED TRAVEL WAY)
GRAPHIC SCALE
BOUNDARY SURVEY AND PROPOSED
RIGHT OF WAY VACATION EXHIBIT
TAX LOT 18 BLOCK 16,
TOWNSHIP OF COLTS NECK
COUNTY OF MONMOUTH, STATE OF NEW JERSEY
BAY POINT

RESOLUTION 2026-195

EXECUTIVE SESSION

WHEREAS, the Open Public Meetings Act, N.J.S.A. 10:4-12(b), permits the exclusion of the public from a meeting in certain circumstances; and

WHEREAS, the Colts Neck Township Committee finds that such circumstances presently exist.

NOW, THEREFORE, BE IT RESOLVED by the Colts Neck Township Committee as follows:

1. The public shall be excluded from discussion of any action upon hereinafter specified subject matter;

2. The general nature of the subject matter to be discussed is as follows:

   a. Potential litigation confidential pursuant to N.J.S.A. 10:4-12(b)(7);

   b. Personnel confidential pursuant to N.J.S.A. 10:4-12(b)(8); and

   c. Property Acquisition pursuant to N.J.S.A. 10:4-12(b)(5);

3. The Committee may take action during closed executive session;

4. It is anticipated that the closed session will last approximately sixty (60) minutes;

5. It is anticipated at this time the above-stated subject matter(s) will be made public when the need for confidentiality no longer exists; and

6. This Resolution shall become effective immediately.

I, Brian O'Malley, do hereby certify the foregoing to be a true and accurate copy of a Resolution passed by the Township Committee of Colts Neck Township during a meeting held on the 28th day of October 2026.

Brian O'Malley, RMC
Municipal Clerk

RECORD OF VOTE					
	M S	Yes	No	NV	Ab
Mayor Viola					
Deputy Mayor Buzzetta					
Rizzuto					
Torchia Buss					
Tobia					
M - Moved S - Seconded X - indicates vote NV - Not Voting Ab - Absent					

RESOLUTION 2026-196

AUTHORIZING AWARD OF CONTRACT
VARIOUS DRAINAGE AND ROADWAY IMPROVEMENTS
S BROTHERS INC.

WHEREAS, Colts Neck Township directed T&M Associates to solicit quotes for Various Drainage and Roadway Improvements within the Township; and

WHEREAS, the Township Engineer received two (2) quotes, and has made a recommendation to award the following contract; and

NOW, THEREFORE, BE IT RESOLVED by the Township Committee of Colts Neck Township that it hereby awards a contract in this regard as follows:

Vendor: S Brothers Inc.
16 Sobechko Road
Manalapan, NJ 07726

Total Quote:

Budget Account No. C-02—0084-252

Amount: $49,923.00

BE IT FURTHER RESOLVED, John Antonides, Chief Financial Officer has hereby certified that funds are available under the account listed.

BE IT FURTHER RESOLVED that a copy of this resolution be forwarded to the following:

1. S Brothers Inc., Vendor;
2. Glenn Gerken, Township Engineer;
3. John Antonides, Chief Financial Officer; and
4. Meghan Bennett, Esq., Township Attorney.

I, Brian O'Malley, do hereby certify the foregoing to be a true and accurate copy of a Resolution passed by the Township Committee of Colts Neck Township during a special meeting held on the 28th day of October 2026.

Brian O'Malley, Municipal Clerk

RECORD OF VOTE					
	M S	Yes	No	NV	Ab
Mayor Viola					
Deputy Mayor Buzzetta					
Rizzuto					
Torchia Buss					
Tobia					
M - Moved S - Seconded X - indicates vote NV - Not Voting Ab - Absent					

RESOLUTION 2026-197

ESTABLISHING HALLOWEEN CURFEW HOURS

BE IT RESOLVED that a curfew shall hereby be established for all residents and non-residents seventeen years and under within the jurisdiction of Colts Neck Township from the hours of 9:00 p.m. to 5:00 a.m. the following morning, each consecutive night, commencing Thursday, October 29, 2026 at 9:00 p.m. until the morning of Sunday, November 1, 2026 at 5:00 a.m., wherein no resident or non-resident minor shall be entitled to be on the streets, thoroughfares and property in Colts Neck Township, other than the property and dwelling wherein said minor resides or is a bona-fide guest of the owner or lessee thereof unless said minor is in the company of an adult of 21 years or older, or traveling to or from a civic, church or school function or employment.

BE IT FURTHER RESOLVED that any juvenile violating the within resolution shall be taken to the Police Headquarters in Colts Neck Township, at which time a telephone call will be directed to his or her parents and/or guardian requesting them to pick up such minor and return him or her to his or her home.

I, Brian O'Malley, do hereby certify the foregoing to be a true and accurate copy of a Resolution passed by the Township Committee of Colts Neck Township during a meeting held on the 28th day of October 2026.

Brian O'Malley, RMC
Municipal Clerk

RECORD OF VOTE					
	M S	Yes	No	NV	Ab
Mayor Michael Viola					
Deputy Daniel Buzzetta					
Rizzuto					
Buss					
Tobia					
M - Moved S - Seconded X - indicates vote NV - Not Voting Ab - Absent					

RESOLUTION 2026-198

CONFIRMING HIRING OF COLTS NECK TOWNSHIP RECREATION DEPARTMENT ADMINISTRATIVE ASSISTANT JENNIFER CHEVESTICK

WHEREAS, the Township wishes to hire Jennifer Chevestick, as a full-time Administrative Assistant for the Department of Recreation and Parks; and

WHEREAS, the Chief Financial Officer has certified that funds are available; and

NOW THEREFORE, BE IT RESOLVED by the Township Committee of Colts Neck Township in the County of Monmouth, State of New Jersey, that it hereby confirms the hiring of Jennifer Chevestick, as a full-time Administrative Assistant at $54,500/annual, effective November 9, 2026; and

BE IT FURTHER RESOLVED that a copy of this resolution be forwarded to the following:

1. John Antonides, Chief Financial Officer; and
2. Colby Marques, Director of Recreation and Parks; and
3. Jennifer Chevestick.

I, Brian O'Malley, do hereby certify the foregoing to be a true and accurate copy of a Resolution passed by the Township Committee of Colts Neck Township during a meeting held on the 28th day of October 2026.

_____
Brian O'Malley, RMC
Municipal Clerk

RECORD OF VOTE					
	M S	Yes	No	NV	Ab
Mayor Viola					
Deputy Mayor Buzzetta					
Rizzuto					
Torchia Buss					
Tobia					
M - Moved S - Seconded X - indicates vote		NV - Not Voting		Ab - Absent	

RESOLUTION 2026-199

AUTHORIZING THE PURCHASE OF A VEHICLE INSTALLATION PACKAGE FOR A 2026 CHEVY TAHOE FOR THE COLTS NECK TOWNSHIP POLICE DEPARTMENT, STATE CONTRACT #17-FLEET-00749 $18,983.29

BE IT RESOLVED by the Township Committee of Colts Neck Township that it hereby authorizes the purchase of a vehicle installation package for a 2026 Chevy Tahoe for the Colts Neck Township Police Department, as follows:

VENDOR: Elite Vehicles Solutions
4168 Dunroamin Road
Wall, NJ 07727

PURCHASE: Upfitting a 2026 Chevy Tahoe 4WD

AMOUNT: $18,983.29

BE IT FURTHER RESOLVED AND CERTIFIED by John Antonides, Chief Financial Officer, that funds for this purpose are provided through the Capital Ordinance # 2026-11, Capital Budget Account # C-02—082-258; and

BE IT FURTHER RESOLVED that the Mayor and Clerk are hereby authorized to execute any documents in this regard; and

BE IT FURTHER RESOLVED that a copy of this resolution be forwarded to the following:

1. Daniel DeVito, Chief of Police; and
2. John Antonides, Chief Financial Officer.

I, Brian O'Malley, do hereby certify the foregoing to be a true and accurate copy of a Resolution passed by the Township Committee of Colts Neck Township during the regular meeting held on the 28th day of October, 2026.

Brian O'Malley, RMC
Municipal Clerk

RECORD OF VOTE					
	M S	Yes	No	NV	Ab
Mayor Viola					
Deputy Mayor Buzzetta					
Rizzuto					
Buss					
Tobia					
M - Moved S - Seconded X - indicates vote NV - Not Voting Ab - Absent					

RESOLUTION 2026-200

APPROVING REQUEST FOR WAIVER OF ALCOHOL PROHIBITION FOR BUCKS MILL PARK RENTAL

WHEREAS, Colts Neck Township has received an application for rental of Bucks Mill Park from the Colts Neck Parent Teacher Organization seeking to host a private event; and

WHEREAS, the organization has requested a waiver of the alcohol prohibition as codified by Township ordinance 177-7 in order to permit guests to bring and consume personal alcohol on premises during this private event; and

WHEREAS, the organization has the necessary insurance coverage required to allow alcohol at the private event.

NOW, THEREFORE, BE IT RESOLVED, by the Township Committee of Colts Neck Township, that the Colts Neck Parent Teacher Organization's request for a waiver of the alcohol prohibition is approved for the private event to be hosted on November 20, 2026 at Bucks Mill Park;

BE IT FURTHER RESOLVED, that as a condition of this approval the applicant has provided the Municipal Clerk with a certificate of insurance coverage naming Colts Neck Township as an additional insured, subject to the Township Administrator's review and approval;

BE IT FURTHER RESOLVED that a copy of this resolution be forwarded to the following:

1. Daniel DeVito, Chief of Police; and
2. Colby Marques, Director of Recreation.

I, Brian O'Malley, do hereby certify the foregoing to be a true and accurate copy of a Resolution passed by the Township Committee of Colts Neck Township during a meeting held on the 28th day of October 2026.

Brian O'Malley, RMC
Municipal Clerk

RECORD OF VOTE					
	M S	Yes	No	NV	Ab
Mayor Viola					
Deputy Mayor Buzzetta					
Rizzuto					
Torchia Buss					
Tobia					
M - Moved S - Seconded X - indicates vote		NV - Not Voting		Ab - Absent	

RESOLUTION 2026-200

APPROVING REQUEST FOR WAIVER OF ALCOHOL PROHIBITION FOR BUCKS MILL PARK RENTAL

WHEREAS, Colts Neck Township has received an application for rental of Bucks Mill Park from the Colts Neck Parent Teacher Organization seeking to host a private event; and

WHEREAS, the organization has requested a waiver of the alcohol prohibition as codified by Township ordinance 177-7 in order to permit guests to bring and consume personal alcohol on premises during this private event; and

WHEREAS, the organization has the necessary insurance coverage required to allow alcohol at the private event.

NOW, THEREFORE, BE IT RESOLVED, by the Township Committee of Colts Neck Township, that the Colts Neck Parent Teacher Organization's request for a waiver of the alcohol prohibition is approved for the private event to be hosted on November 20, 2026 at Bucks Mill Park;

BE IT FURTHER RESOLVED, that as a condition of this approval the applicant has provided the Municipal Clerk with a certificate of insurance coverage naming Colts Neck Township as an additional insured, subject to the Township Administrator's review and approval;

BE IT FURTHER RESOLVED that a copy of this resolution be forwarded to the following:

1. Daniel DeVito, Chief of Police; and
2. Colby Marques, Director of Recreation.

I, Brian O'Malley, do hereby certify the foregoing to be a true and accurate copy of a Resolution passed by the Township Committee of Colts Neck Township during a meeting held on the 28th day of October 2026.

Brian O'Malley, RMC
Municipal Clerk

RECORD OF VOTE					
	M S	Yes	No	NV	Ab
Mayor Viola					
Deputy Mayor Buzzetta					
Rizzuto					
Torchia Buss					
Tobia					
M - Moved S - Seconded X - indicates vote NV - Not Voting Ab - Absent					

RESOLUTION 2026-200

APPROVING REQUEST FOR WAIVER OF ALCOHOL PROHIBITION FOR BUCKS MILL PARK RENTAL

WHEREAS, Colts Neck Township has received an application for rental of Bucks Mill Park from the Colts Neck Parent Teacher Organization seeking to host a private event; and

WHEREAS, the organization has requested a waiver of the alcohol prohibition as codified by Township ordinance 177-7 in order to permit guests to bring and consume personal alcohol on premises during this private event; and

WHEREAS, the organization has the necessary insurance coverage required to allow alcohol at the private event.

NOW, THEREFORE, BE IT RESOLVED, by the Township Committee of Colts Neck Township, that the Colts Neck Parent Teacher Organization's request for a waiver of the alcohol prohibition is approved for the private event to be hosted on November 20, 2026 at Bucks Mill Park;

BE IT FURTHER RESOLVED, that as a condition of this approval the applicant has provided the Municipal Clerk with a certificate of insurance coverage naming Colts Neck Township as an additional insured, subject to the Township Administrator's review and approval;

BE IT FURTHER RESOLVED that a copy of this resolution be forwarded to the following:

1. Daniel DeVito, Chief of Police; and
2. Colby Marques, Director of Recreation.

I, Brian O'Malley, do hereby certify the foregoing to be a true and accurate copy of a Resolution passed by the Township Committee of Colts Neck Township during a meeting held on the 28th day of October 2026.

Brian O'Malley, RMC
Municipal Clerk

RECORD OF VOTE					
	M S	Yes	No	NV	Ab
Mayor Viola					
Deputy Mayor Buzzetta					
Rizzuto					
Torchia Buss					
Tobia					
M - Moved S - Seconded X - indicates vote		NV - Not Voting		Ab - Absent	

RESOLUTION 2026-200

APPROVING REQUEST FOR WAIVER OF ALCOHOL PROHIBITION FOR BUCKS MILL PARK RENTAL

WHEREAS, Colts Neck Township has received an application for rental of Bucks Mill Park from the Colts Neck Parent Teacher Organization seeking to host a private event; and

WHEREAS, the organization has requested a waiver of the alcohol prohibition as codified by Township ordinance 177-7 in order to permit guests to bring and consume personal alcohol on premises during this private event; and

WHEREAS, the organization has the necessary insurance coverage required to allow alcohol at the private event.

NOW, THEREFORE, BE IT RESOLVED, by the Township Committee of Colts Neck Township, that the Colts Neck Parent Teacher Organization's request for a waiver of the alcohol prohibition is approved for the private event to be hosted on November 20, 2026 at Bucks Mill Park;

BE IT FURTHER RESOLVED, that as a condition of this approval the applicant has provided the Municipal Clerk with a certificate of insurance coverage naming Colts Neck Township as an additional insured, subject to the Township Administrator's review and approval;

BE IT FURTHER RESOLVED that a copy of this resolution be forwarded to the following:

1. Daniel DeVito, Chief of Police; and
2. Colby Marques, Director of Recreation.

I, Brian O'Malley, do hereby certify the foregoing to be a true and accurate copy of a Resolution passed by the Township Committee of Colts Neck Township during a meeting held on the 28th day of October 2026.

Brian O'Malley, RMC
Municipal Clerk

RECORD OF VOTE					
	M S	Yes	No	NV	Ab
Mayor Viola					
Deputy Mayor Buzzetta					
Rizzuto					
Torchia Buss					
Tobia					
M - Moved S - Seconded X - indicates vote		NV - Not Voting		Ab - Absent	

RESOLUTION 2026-200

APPROVING REQUEST FOR WAIVER OF ALCOHOL PROHIBITION FOR BUCKS MILL PARK RENTAL

WHEREAS, Colts Neck Township has received an application for rental of Bucks Mill Park from the Colts Neck Parent Teacher Organization seeking to host a private event; and

WHEREAS, the organization has requested a waiver of the alcohol prohibition as codified by Township ordinance 177-7 in order to permit guests to bring and consume personal alcohol on premises during this private event; and

WHEREAS, the organization has the necessary insurance coverage required to allow alcohol at the private event.

NOW, THEREFORE, BE IT RESOLVED, by the Township Committee of Colts Neck Township, that the Colts Neck Parent Teacher Organization's request for a waiver of the alcohol prohibition is approved for the private event to be hosted on November 20, 2026 at Bucks Mill Park;

BE IT FURTHER RESOLVED, that as a condition of this approval the applicant has provided the Municipal Clerk with a certificate of insurance coverage naming Colts Neck Township as an additional insured, subject to the Township Administrator's review and approval;

BE IT FURTHER RESOLVED that a copy of this resolution be forwarded to the following:

1. Daniel DeVito, Chief of Police; and
2. Colby Marques, Director of Recreation.

I, Brian O'Malley, do hereby certify the foregoing to be a true and accurate copy of a Resolution passed by the Township Committee of Colts Neck Township during a meeting held on the 28th day of October 2026.

Brian O'Malley, RMC
Municipal Clerk

RECORD OF VOTE					
	M S	Yes	No	NV	Ab
Mayor Viola					
Deputy Mayor Buzzetta					
Rizzuto					
Torchia Buss					
Tobia					
M - Moved S - Seconded X - indicates vote		NV - Not Voting		Ab - Absent	

RESOLUTION 2026-200

APPROVING REQUEST FOR WAIVER OF ALCOHOL PROHIBITION FOR BUCKS MILL PARK RENTAL

WHEREAS, Colts Neck Township has received an application for rental of Bucks Mill Park from the Colts Neck Parent Teacher Organization seeking to host a private event; and

WHEREAS, the organization has requested a waiver of the alcohol prohibition as codified by Township ordinance 177-7 in order to permit guests to bring and consume personal alcohol on premises during this private event; and

WHEREAS, the organization has the necessary insurance coverage required to allow alcohol at the private event.

NOW, THEREFORE, BE IT RESOLVED, by the Township Committee of Colts Neck Township, that the Colts Neck Parent Teacher Organization's request for a waiver of the alcohol prohibition is approved for the private event to be hosted on November 20, 2026 at Bucks Mill Park;

BE IT FURTHER RESOLVED, that as a condition of this approval the applicant has provided the Municipal Clerk with a certificate of insurance coverage naming Colts Neck Township as an additional insured, subject to the Township Administrator's review and approval;

BE IT FURTHER RESOLVED that a copy of this resolution be forwarded to the following:

1. Daniel DeVito, Chief of Police; and
2. Colby Marques, Director of Recreation.

I, Brian O'Malley, do hereby certify the foregoing to be a true and accurate copy of a Resolution passed by the Township Committee of Colts Neck Township during a meeting held on the 28th day of October 2026.

Brian O'Malley, RMC
Municipal Clerk

RECORD OF VOTE					
	M S	Yes	No	NV	Ab
Mayor Viola					
Deputy Mayor Buzzetta					
Rizzuto					
Torchia Buss					
Tobia					
M - Moved S - Seconded X - indicates vote		NV - Not Voting		Ab - Absent	

RESOLUTION 2026-200

APPROVING REQUEST FOR WAIVER OF ALCOHOL PROHIBITION FOR BUCKS MILL PARK RENTAL

WHEREAS, Colts Neck Township has received an application for rental of Bucks Mill Park from the Colts Neck Parent Teacher Organization seeking to host a private event; and

WHEREAS, the organization has requested a waiver of the alcohol prohibition as codified by Township ordinance 177-7 in order to permit guests to bring and consume personal alcohol on premises during this private event; and

WHEREAS, the organization has the necessary insurance coverage required to allow alcohol at the private event.

NOW, THEREFORE, BE IT RESOLVED, by the Township Committee of Colts Neck Township, that the Colts Neck Parent Teacher Organization's request for a waiver of the alcohol prohibition is approved for the private event to be hosted on November 20, 2026 at Bucks Mill Park;

BE IT FURTHER RESOLVED, that as a condition of this approval the applicant has provided the Municipal Clerk with a certificate of insurance coverage naming Colts Neck Township as an additional insured, subject to the Township Administrator's review and approval;

BE IT FURTHER RESOLVED that a copy of this resolution be forwarded to the following:

1. Daniel DeVito, Chief of Police; and
2. Colby Marques, Director of Recreation.

I, Brian O'Malley, do hereby certify the foregoing to be a true and accurate copy of a Resolution passed by the Township Committee of Colts Neck Township during a meeting held on the 28th day of October 2026.

_____

Brian O'Malley, RMC
Municipal Clerk

RECORD OF VOTE					
	M S	Yes	No	NV	Ab
Mayor Viola					
Deputy Mayor Buzzetta					
Rizzuto					
Torchia Buss					
Tobia					
M - Moved S - Seconded X - indicates vote NV - Not Voting Ab - Absent					

RESOLUTION 2026-200

APPROVING REQUEST FOR WAIVER OF ALCOHOL PROHIBITION FOR BUCKS MILL PARK RENTAL

WHEREAS, Colts Neck Township has received an application for rental of Bucks Mill Park from the Colts Neck Parent Teacher Organization seeking to host a private event; and

WHEREAS, the organization has requested a waiver of the alcohol prohibition as codified by Township ordinance 177-7 in order to permit guests to bring and consume personal alcohol on premises during this private event; and

WHEREAS, the organization has the necessary insurance coverage required to allow alcohol at the private event.

NOW, THEREFORE, BE IT RESOLVED, by the Township Committee of Colts Neck Township, that the Colts Neck Parent Teacher Organization's request for a waiver of the alcohol prohibition is approved for the private event to be hosted on November 20, 2026 at Bucks Mill Park;

BE IT FURTHER RESOLVED, that as a condition of this approval the applicant has provided the Municipal Clerk with a certificate of insurance coverage naming Colts Neck Township as an additional insured, subject to the Township Administrator's review and approval;

BE IT FURTHER RESOLVED that a copy of this resolution be forwarded to the following:

1. Daniel DeVito, Chief of Police; and
2. Colby Marques, Director of Recreation.

I, Brian O'Malley, do hereby certify the foregoing to be a true and accurate copy of a Resolution passed by the Township Committee of Colts Neck Township during a meeting held on the 28th day of October 2026.

Brian O'Malley, RMC
Municipal Clerk

RECORD OF VOTE					
	M	S	Yes	No	NV	Ab
Mayor Viola						
Deputy Mayor Buzzetta						
Rizzuto						
Torchia Buss						
Tobia						

M - Moved S - Seconded X - indicates vote NV - Not Voting Ab - Absent

RESOLUTION 2026-201

APPOINTING COLTS NECK TOWNSHIP DEPUTY MUNICIPAL CLERK AND AUTHORIZING COMPENSATION ADJUSTMENT FOR COLTS NECK TOWNSHIP EMPLOYEE – ALEXANDRA TUCKER

WHEREAS, in response to a change in organizational structure related to the retirement of the Township Administrator/Deputy Municipal Clerk there exists a vacancy in the position of Deputy Municipal Clerk to; and

WHEREAS, the Township wishes to appoint Alexandra Tucker, Deputy Municipal Clerk; and

WHEREAS, Ms. Tucker has agreed to take on the additional role of Deputy Municipal Clerk; and

WHEREAS, in recognition of this additional appointment, the Township Committee authorizes additional compensation for Ms. Tucker in the amount of $2,000.00/annum.

NOW THEREFORE, BE IT RESOLVED by the Township Committee of Colts Neck Township in the County of Monmouth, State of New Jersey, that it hereby authorizes a salary increase of $2,000/annum for Ms. Tucker effective November 1, 2026; and

BE IT FURTHER RESOLVED that a copy of this resolution be forwarded to the following:

1. John Antonides, Chief Financial Office; and
2. Alexandra Tucker, Finance Clerk/Administrative Assistant/Deputy Municipal Clerk.

I, Brian O'Malley, do hereby certify the foregoing to be a true and accurate copy of a Resolution passed by the Township Committee of Colts Neck Township during the regular meeting held on the 28th day or October 2026.

_____

Brian O'Malley, Municipal Clerk

RECORD OF VOTE					
	M S	Yes	No	NV	Ab
Mayor Viola					
Deputy Mayor Buzzetta					
Rizzuto					
Torchia Buss					
Tobia					
M - Moved S - Seconded X - indicates vote		NV - Not Voting		Ab - Absent	

RESOLUTION 2026-202

AUTHORIZING COMPENSATION ADJUSTMENT FOR COLTS NECK TOWNSHIP EMPLOYEE - LAUREN ONDRUSH

WHEREAS, in response to a change in organizational structure related to a vacancy in the Health Department, there exists administrative duties that will need to be tended to; and

WHEREAS, the Township's Deputy Treasurer/Deputy Tax Collector, Lauren Ondrush, has agreed to take on these additional administrative duties; and

WHEREAS, in recognition of these additional duties, the Township Committee authorizes additional compensation for Ms. Ondrush in the amount of $2,000.00/annum.

NOW THEREFORE, BE IT RESOLVED by the Township Committee of Colts Neck Township in the County of Monmouth, State of New Jersey, that it hereby authorizes a salary increase of $2,000/annum for Ms. Ondrush effective November 1, 2026; and

BE IT FURTHER RESOLVED that a copy of this resolution be forwarded to the following:

1. John Antonides, Chief Financial Office; and
2. Lauren Ondrush, Deputy Treasurer/Deputy Tax Collector.

I, Brian O'Malley, do hereby certify the foregoing to be a true and accurate copy of a Resolution passed by the Township Committee of Colts Neck Township during the regular meeting held on the 28th day or October 2026.

Brian O'Malley, Municipal Clerk

RECORD OF VOTE					
	M S	Yes	No	NV	Ab
Mayor Viola					
Deputy Mayor Buzzetta					
Rizzuto					
Torchia Buss					
Tobia					
M - Moved S - Seconded X - indicates vote		NV - Not Voting		Ab - Absent	

RESOLUTION 2026-203

ENABLING THE EXECUTION OF AN AMENDMENT TO FUNDING AGREEMENT WITH THE DEPARTMENT OF ENVIRONMENTAL PROTECTION GREEN ACRES PROGRAM

WHEREAS, the New Jersey Department of Environmental Protection, Green Acres Program ("State"), provides loans and/or grants to municipal and county governments and grants to nonprofit organizations for assistance in the acquisition and development of lands for outdoor recreation and conservation purposes; and

WHEREAS, Colts Neck Township has obtained a Green Acres grant of $1,047,500.00 from the State to fund the following project(s):

1309-97-097, Planning Incentive; and

WHEREAS, the State and Colts Neck Township intend to increase Green Acres funding by $900,000.00, to increase Green Acres funding to a total of $1,947,500.00; and

NOW, THEREFORE, BE IT RESOLVED by the Township Committee of Colts Neck Township that:

1. The Mayor of the above-named body or board is hereby authorized to execute an agreement and any amendment(s) thereto with the State known as 1309-97-097, Planning Incentive, and;
2. The applicant agrees to provide its matching share to the Green Acres funding, if a match is required, in the amount of $1,947,500.00; and
3. The applicant agrees to comply with all applicable federal, state, and local laws, rules, and regulations in its performance of the project, and;
4. This resolution shall take effect immediately.

BE IT FURTHER RESOLVED that a copy of this resolution be forwarded to the following:

1. John Antonides, Chief Financial Officer; and
2. Timothy Anfuso, Township Planner.

I, Brian O'Malley, do hereby certify the foregoing to be a true and accurate copy of a Resolution passed by the Township Committee of Colts Neck Township during a meeting held on the 28th day of October 2026.

Brian O'Malley, RMC
Municipal Clerk

RECORD OF VOTE					
	M S	Yes	No	NV	Ab
Mayor Viola					
Deputy Mayor Buzzetta					
Rizzuto					
Torchia Buss					
Tobia					
M - Moved S - Seconded X - indicates vote		NV - Not Voting		Ab - Absent	

RESOLUTION 2026-204

RESOLUTION AUTHORIZING ACCEPTANCE OF GRANT AGREEMENT WITH MONMOUTH COUNTY FOR THE BUCKS MILL PARK FACILITIES IMPROVEMENT PROJECT

WHEREAS, Colts Neck Township ("Township") seeks to make safety and facility improvements to an existing recreational building located at 125 Bucks Mill Road "Bucks Mill Park"; and

WHEREAS, such improvements would include installation of Indoor cameras, outdoor cameras, access panel and card reader with key pad, and padded flooring within the building at Bucks Mill Park; and

WHEREAS, the Township made application to Monmouth County (the "County") for financial assistance under the latter's Municipal Park Improvement Grant Program hereinafter "Program"; and

WHEREAS, the County reviewed the Township's application and found it to be in conformance with the scope and intent of the Program and approved the Township's request for funding; and

WHEREAS, the County has provided the Township with a Grant Agreement for the Township's execution (attached as Exhibit A to this resolution), such agreement to grant the Township $55,000.00 to fund the improvements at Bucks Mill Park; and WHEREAS, the Township believes accepting this grant from the County is in the best interests of the residents, advancing an improvement to Bucks Mill Park that will benefit the community as a whole.

NOW, THEREFORE, BE IT RESOLVED by the Township Committee of Colts Neck Township that the Township shall accept the grant award of Monmouth County from the latter's Municipal Park Improvement Grant Program for $55,000.00 for purposes of making safety and facility improvements at Bucks Mill Park in Colts Neck as described in the County's Grant Agreement.

BE IT FURTHER RESOLVED that the Township Attorney, Mayor, and/or Township Administrator are hereby authorized to execute all such documents and instruments necessary to effectuate the foresaid Grant Agreement.

I, Brian O'Malley, do hereby certify the foregoing to be a true and accurate copy of a Resolution passed by the Township Committee of Colts Neck Township during the regular meeting held on the 28th day of October, 2026.

_____

Brian O'Malley, RMC
Municipal Clerk

RECORD OF VOTE					
	M S	Yes	No	NV	Ab
Mayor Viola					
Deputy Mayor Buzzetta					
Rizzuto					
Buss					
Tobia					
M - Moved S - Seconded X - indicates vote NV - Not Voting Ab - Absent					

EXHIBIT A

The County of Monmouth
Municipal Park Improvement Grant Program
Grant Agreement

BETWEEN the Township of Colts Neck, having official offices at, 14 Heyers Mill Rd, Colts Neck, NJ 07722, hereinafter "Grantee," and the Monmouth County Board of County Commissioners, Hall of Records Annex, One East Main Street, P.O. Box 1255, Freehold, New Jersey 07728, hereinafter "County."

This Agreement was entered into by the Monmouth County Board of County Commissioners on:

Date:

WITNESSETH:

WHEREAS, Grantee has made application to the County for financial assistance under the Municipal Park Improvement Grant Program hereinafter "Program"; and

WHEREAS, the County has reviewed said application and has found it to be in conformance with the scope and intent of the Program and has approved Grantee's request for funding;

NOW, THEREFORE, in consideration of the award of funding, and in accordance with the application heretofore filed, the County and Grantee agree to perform in accordance with the terms and conditions set forth in this agreement.

1. The Grantee agrees to perform the Bucks Mill Park Facilities Improvement Project in the manner set forth in this agreement and Exhibit 1 – Approved Project Description for the consideration stated herein.
2. The period of performance under this Agreement is specified as thirty months from the project selection, for which period, funds are available and allotted. There shall be no obligation on the part of the County to renew or extend this time period.
3. The amount of the award to be provided by the County under this subcontract is $55,000. The County award is based upon the Grantee's application 26-22 to the County for financial assistance dated July 9, 2026 and as supplemented. In the event that the anticipated amount of the Grantee's contribution as provided for in the Program Grant Application decreases, then the County's obligation to provide the award set forth in this paragraph shall be void by the County and at the County's option.
4. The Grantee agrees to provide all funds necessary for completion of the Approved Project (Exhibit 1) and to complete the Approved Project in accordance with this Agreement and the conditions, specifications, plans, estimates, project proposals and maps submitted to the County and incorporated herein by reference.
5. Program funds shall be dispersed on a reimbursement basis after the satisfactory completion of the project.
6. Grantee agrees that any Program funds received from the County shall be used only for the purposes described herein.
7. Costs eligible for assistance shall be limited to those eligible costs listed in the Policy and Procedures Manual for the Program. The County award of funding specifically does not include financial assistance for any soft costs, including but not limited to, any costs for title searches, title insurance, surveys, attorney fees, recording fees, and real estate taxes.
8. The Grantee shall furnish and deliver all necessary documentation within the timeframe and in the manner requested by the County and shall grant County personnel and any authorized representatives of the County reasonable access to all records related to the Approved Project.

9. Grantee shall maintain and preserve all land and improvements described herein and provide such police protection as may be necessary.
10. Grantee shall execute and donate to the County of Monmouth at no charge a Deed of Open Space Easement, pursuant to P.L. 1979, c.378 (C) 13:8B-1 et seq. on any land to be (acquired/developed) using funds received from the Monmouth County Open Space and Farmland Preservation, Recreation and Conservation and Historic Preservation Trust Fund (N.J.S.A. 40:14-19(d)(5)).which easement shall include the following language.
    a. It is the purpose of this Easement to guarantee that the Property will be retained forever for public park, recreation and open space uses and to prevent any use of the Property that will significantly impair or interfere with the park and open space values of the Property.
    b. The property shall be held in trust in perpetuity and used exclusively for the purposes authorized by the Open Space and Farmland Preservation, Recreation and Conservation and Historic Preservation Act, as may be amended from time to time (N.J.S.A. 40:12-15.6b).
    c. The Township of Colts Neck agrees to make and keep the open space accessible to the public, unless the municipality and County determines that public accessibility would be detrimental to the lands, waters or improvements thereon, or to any natural resources associated therewith (N.J.S.A. 40:12-15.6d(3)).
    d. The Township of Colts Neck agrees not to lease, sell, exchange or donate the property described herein which is being acquired pursuant to P.L. 1997 c. 24, NJSA 40:12-15.6(A) except upon approval of the Monmouth County Board of County Commissioners and upon such conditions as the Monmouth County Board of County Commissioners may establish (N.J.S.A. 40:12-15.6d(4)), including but not limited to replacement with land of no less or greater utility , acreage, and value.

11. Grantee shall provide a copy of the deed of record to the Program Administrator in care of the Monmouth County Park System for recordkeeping purposes.
12. Grantee shall display a sign on the property reflecting the use of County Open Space funds for purchase of or improvement to the property, which sign shall be provided by the Program Administrator.
13. Grantee shall cause the funded property to be listed on the Municipal Recreation and Open Space Inventory at the time it is filed with the New Jersey Green Acres Program or its successor.
14. Grantee shall provide access to the facility/property for County staff to conduct an annual inspection.
15. No official or employee of the Grantee who is authorized in his/her official capacity to negotiate, make, accept or approve, or take part in such decisions regarding a contract or subcontract in connection with the Approved Project shall have any financial or other personal interest in any such contract or subcontract.
16. In the event Grantee does not perform any of the services, obligations, or responsibilities provided for under this Agreement, or in the event that the services do not attain the objectives set forth in the initial application or this agreement to the sole satisfaction of the County, then the County may withhold all, or a portion of, any payment to be made under this agreement, and in addition, may declare this subcontract null and void. In the event of termination, the County shall have no further liability to the Grantee and in no event will the County be liable to pay for services not actually rendered.
17. The County will provide a Program Administrator for the program that will advise the Grantee in performance of the required services. Contact:

    Monmouth County Park System
    Attn: Municipal Open Space Grant Program
    805 Newman Springs Road
    Lincroft, NJ 07728-1695
    732-842-4000

18. The Grantee, at the request of the County, may be required to prepare a progress report and submit to the County within 30 calendar days after the date requested.

The report shall include a narrative description of the status of the Approved Project and the date on which the Approved Project will be completed.

19. The Grantee now complies with all applicable State and Federal Laws in connection with its business and activities related to the services to be provided including, without limitation, any applicable Federal or State Civil Rights Law, order or regulation.
20. The execution of this Agreement has been authorized by the Grantee's governing body and the Monmouth County Board of County Commissioners.
21. The Grantee shall indemnify and hold the County of Monmouth harmless from any and all loss, damages, suits, penalties, expenses, including but not limited to reasonable investigation and legal expenses, arising out of the operation of the program, or arising out of, or under this Agreement. The Grantee further agrees to indemnify the County of Monmouth from suits or actions of every nature or description brought against it, or damages received or sustained by any party or parties, by or from any of the acts of the Grantee or of the Grantee's, Director's employees, agents or volunteers.
22. The Grantee shall procure and maintain at its own expense, liability insurance for any personal injury or property damage to be reviewed and accepted by the County of Monmouth caused by the Grantee in its normal and usual course of business. The Grantee expressly understands and agrees that any insurance protection required by this Agreement shall in no way limit the Grantee's obligations assumed in this Agreement and shall not be construed to relieve the Grantee from liability in excess of such coverage.

IN WITNESS WHEREOF, the parties have executed this contract as of the day and year first above written.

ATTEST/SEAL

_____

Date _____

Monmouth County Board of County Commissioners

BY _____

_____

County Commissioner Director

ATTEST/SEAL

_____

Date:_____

For the GRANTEE:

BY _____

_____

(Name:_____)

_____

(Title:_____)

Exhibit 1: Approved Project Description

Application #: 26-22

Grantee: Township of Colts Neck

Address: 14 Heyers Mill Rd, Colts Neck, NJ 07722

Municipally Designated Main Contact Person: Colby Marques, Director of Recreation and Parks

E-mail: cmarques@coltsneck.org

Project Name: Bucks Mill Park Facilities Improvement Project

Project Location(s): 125 Bucks Mill Road, Colts Neck, NJ 07722
Block 23, Lot 37

Grant Award: $55,000

Project Performance Period deadline to submit all required close-out documentation for grant reimbursement: June 1, 2029

Project Scope: Safety and facility improvements at the existing recreational building.

Project Elements: Indoor cameras, outdoor cameras, access panel and card reader with key pad, padded flooring with logo.

Project Conditions: County grant funds are payable on a reimbursable basis. The final award shall not exceed the above grant amount or 50% of the actual eligible project costs, whichever is less.