TOWNSHIP COMMITTEE MEETING

October 14, 2026

CHECK LIST GRAND TOTALS

ACCOUNT	AMOUNT
Alliance Against Abuse	
Animal Control	$ 13.20
Capital Fund	$ 40,000.00
COAH	$ 736.00
Construction Trust	$ 12,583.41
Current Fund	$ 2,887,224.83
Escrow	$ 81.58
Farmland Preservation Trust	
Grant Fund	$ 376.16
Law	
Tax Collectors Trust	
Trust Fund	
TOTAL:	$ 2,941,015.18

I hereby certify that the foregoing check list totaling $2,941,015.18 is true and accurate and was approved for payment at the Township Committee meeting on October 14, 2026.

_____

John D. Antonides, Finance Officer

Range of Checking Accts: AASA to TRWIRE Range of Check Dates: 09/29/26 to 10/13/26
Report Type: All Checks Report Format: Detail Check Type: Computer: Y Manual: Y Dir Deposit: Y

Check #	Check Date	Vendor	PO #	Item	Description	Amount Paid	Charge Account	Account Type	Reconciled/Void	Ref Num Contract	Ref Seq	Acct
AC		ANIMAL CONTROL										
1899	10/07/26	NJ S1	NJ DEPT OF HEALTH & SENIOR SVC							13672		
			26-01941	1	SEPT. 2026 DOG FEES DUE STATE	13.20	D-06- -001-201 DUE STATE OF N.J. DEPT/HLTH	Budget		1	1	

Checking Account Totals	Paid	Void	Amount Paid	Amount Void
Checks:	1	0	13.20	0.00
Direct Deposit:	0	0	0.00	0.00
Total:	1	0	13.20	0.00

Check #	Check Date	Vendor	PO #	Item	Description	Amount Paid	Charge Account	Account Type	Reconciled/Void	Ref Num Contract	Ref Seq	Acct
CAPITAL		CAPITAL										
2981	10/07/26	AYEH	DERICK A. AYEH & MONICA APPIAH							13673		
			26-01932	1	DEED RESTRICTION-16 HANCOCK PA	40,000.00	C-02- -081-279 EXTENSION OF AFFORDABILITY CONTROLS	Budget		1	1	

Checking Account Totals	Paid	Void	Amount Paid	Amount Void
Checks:	1	0	40,000.00	0.00
Direct Deposit:	0	0	0.00	0.00
Total:	1	0	40,000.00	0.00

Check #	Check Date	Vendor	PO #	Item	Description	Amount Paid	Charge Account	Account Type	Reconciled/Void	Ref Num Contract	Ref Seq	Acct
COAH		COAH TRUST FUND										
458	10/07/26	TAYLOR D	TAYLOR DESIGN GROUP, INC.							13674		
			26-01916	1	CONSULTING FOR AFFORD. HOUSING	736.00	T-04- -026-201 OTHER EXPENSES	Budget		1	1	

Checking Account Totals	Paid	Void	Amount Paid	Amount Void
Checks:	1	0	736.00	0.00
Direct Deposit:	0	0	0.00	0.00
Total:	1	0	736.00	0.00

Check #	Check Date	Vendor	PO #	Item	Description	Amount Paid	Charge Account	Account Type	Reconciled/Void	Ref Num Contract	Ref Seq	Acct
CON		CONSTRUCTION										
4338	10/07/26	CARVIN	EDWARD C. CARVIN							13675		
			26-01979	1	PERSONAL MILEAGE - SEPT 2026	274.78	T-04- -017-287 PERSONAL AUTO & MILEAGE	Budget		5	1	
4339	10/07/26	CONTICCH	THOMAS B. CONTICCHIO							13675		
			26-01977	1	PERSONAL MILEAGE - SEPT 2026	203.00	T-04- -017-287 PERSONAL AUTO & MILEAGE	Budget		3	1	
4340	10/07/26	JUNGLE	JUNGLE LASERS, LLC							13675		
			26-01909	1	ANNUAL SOFTWARE FEE-GEO3.0 GOV	11,110.00	T-04- -017-264 COMPUTER SUPPORT	Budget		1	1	
4341	10/07/26	M WINCH	MICHAEL WINCH							13675		
			26-01978	1	PERSONAL MILEAGE - SEPT 2026	192.85	T-04- -017-287 PERSONAL AUTO & MILEAGE	Budget		4	1	
4342	10/07/26	NJ NA	NJ NATURAL GAS COMPANY							13675		
			26-01959	1	A/C230001015796-124 CEDAR DR	645.51	T-04- -017-274 UTILITIES	Budget		2	1	

Check # / Check Date / Vendor / PO # / Item	Description	Amount Paid	Charge Account	Account Type	Reconciled/Void / Contract	Ref Num / Ref Seq / Acct
CON	CONSTRUCTION Continued					
4343 10/13/26 PRINTING PRINTING2GO						13684
26-01982 1	OPRA COPY	16.80	T-04- -017-219 PRINTING, BINDING & CODIF.	Budget		2 1
4344 10/13/26 STAPE STAPLES ADVANTAGE						13684
26-01968 1	OFFICE SUPPLIES - BLDG DEPT	140.47	T-04- -017-201 GENERAL OFFICE SUPPLIES	Budget		1 1

Checking Account Totals	Paid	Void	Amount Paid	Amount Void
Checks:	7	0	12,583.41	0.00
Direct Deposit:	0	0	0.00	0.00
Total:	7	0	12,583.41	0.00

CURRENT						
57167 10/07/26 CAPRISTO KATHLEEN CAPRISTO						13676
26-01939 1	ZOOM REIMBURSEMENT-SEPT 2026	51.18	6-01- -001-264 COMPUTER SUPPORT	Budget		13 1
57168 10/07/26 ALLERGO ALLEGRO REFRESHMENTS						13676
26-01926 1	TWSP WATER RENTAL & DELIVERY	407.50	6-01- -008-275 WATER	Budget		11 1
57169 10/07/26 AMAZON AMAZON CAPITAL SERVICES						13676
26-01917 1	FIRE DEPARTMENT SUPPLIES	52.49	6-01- -015-452 FIRE BUDGET	Budget		5 1
57170 10/07/26 ASSOC ASSOCIATED HUMANE SOCIETIES						13676
26-01956 1	ANIMAL CONTROL SERVICES	2,662.33	6-01- -021-441 ANIMAL CONTROL REGULATIONS	Budget		35 1
57171 10/07/26 COOP1 COOPERATIVE COMMUNICATIONS, IN						13676
26-01929 1	TELEPHONE FIRE CO #1	158.13	6-01- -015-455 FIRE CO. BUILDING MAINT. # 1	Budget		12 1
57172 10/07/26 ELITEEM ELITE VEHICLE SOLUTIONS						13676
26-01705 1	RADIO ANTENNA REPAIR	420.73	6-01- -017-224 MAINT. & REPAIRS VEHICLES	Budget		2 1
57173 10/07/26 ENGEL P PHILIP ENGEL						13676
26-01986 1	PERSONAL MILEAGE- FEB-SEP 2026	123.25	6-01- -030-287 PERSONAL AUTO & MILEAGE	Budget		43 1
57174 10/07/26 GOLDYS GOLDY'S CREAM LLC						13676
26-01913 1	SUMMER CAMP ICE CREAM TRUCK	400.00	6-01- -023-295 SUMMER PROGRAMS	Budget		4 1
57175 10/07/26 HENNESSY JACQUELYN HENNESSY						13676
26-01924 1	COURT SOUND RECORDING - SEPT	445.00	6-01- -041-102 SEASONAL, TEMPORARY, PART-TIME	Budget		9 1

Check #	Check Date	Vendor	PO #	Item	Description	Amount Paid	Charge Account	Account Type	Reconciled/Void	Ref Num Contract	Ref Seq	Acct
CURRENT					Continued							
57176	10/07/26	JOLINE L JOLINE LAWN & LANDSCAPE								13676		
			26-01958	1	LANDSCAPING - FIREHOUSE #1	312.93	6-01- -015-455 FIRE CO. BUILDING MAINT. # 1	Budget			37	1
57177	10/07/26	JSRHC JERSEY SHORE REGIONAL HEALTH								13676		
			26-01947	1	TEMP. HEALTH SERVICES-OCT.'26	9,561.28	6-01- -019-298 PROFESSIONAL SERVICES	Budget			18	1
57178	10/07/26	KYLEMC KYLE MCMANUS ASSOCIATES LLC								13676		
			26-01922	1	AFFORDABLE HOUSING - SEPT 2026	2,062.50	6-01- -006-347 AFFORDABLE HOUSING	Budget			7	1
57179	10/07/26	NJ NA NJ NATURAL GAS COMPANY								13676		
			26-01949	1	A/C#230000345947/FIRE CO #1	130.39	6-01- -015-455 FIRE CO. BUILDING MAINT. # 1	Budget			19	1
			26-01950	1	A/C#230000346139/FIRE CO #1	63.20	6-01- -015-455 FIRE CO. BUILDING MAINT. # 1	Budget			20	1
						193.59						
57180	10/07/26	NJLEAG NJ LEAGUE OF MUNICIPALITIES								13676		
			26-01946	1	ADVERTISEMENT-HEALTH OFFICER/	210.00	6-01- -001-218 ADVERTISING	Budget			17	1
57181	10/07/26	NJWATER NEW JERSEY AMERICAN WATER								13676		
			26-01962	1	COLTS NECK HYDRANT - SEPT 2026	81.62	6-01- -008-275 WATER	Budget			39	1
57182	10/07/26	PRISM PRISMVOICE								13676		
			26-01953	1	TELEPHONE-RECREATION	45.54	6-01- -034-903 TELEPHONE-BUILDINGS & GROUNDS	Budget			22	1
			26-01953	2	TELEPHONE-COURT	184.39	6-01- -034-903 TELEPHONE-BUILDINGS & GROUNDS	Budget			23	1
			26-01953	3	TELEPHONE-TOWN HALL	500.95	6-01- -034-903 TELEPHONE-BUILDINGS & GROUNDS	Budget			24	1
			26-01953	4	TELEPHONE-PUBLIC WORKS	68.31	6-01- -034-903 TELEPHONE-BUILDINGS & GROUNDS	Budget			25	1
			26-01953	5	TELEPHONE-POLICE DEPARTMENT	507.64	6-01- -034-901 TELEPHONE-POLICE	Budget			26	1
						1,306.83						
57183	10/07/26	REPUBLIC REPUBLIC SERVICES, INC.								13676		
			26-01985	1	RECYCLING SVS-AS PER CONTRACT	35,636.34	6-01- -024-461 RECYCLING CONTRACT	Budget			42	1
57184	10/07/26	RESOURCE RESOURCE MANAGEMENT								13676		
			26-01957	1	SEPTIC SYST OPERATION-NEW BLDG	2,372.00	6-01- -008-233 MAINT & REPAIRS OF FACILITY	Budget			36	1
57185	10/07/26	RUDNICK RUDNICK,ADDONIZIO,PAPPA &								13676		
			26-01963	1	PUBLIC DEFENDER-MICHAEL PAPPA	200.00	6-01- -006-317 PUBLIC DEFENDER	Budget			40	1

Check #	Check Date	Vendor	PO #	Item	Description	Amount Paid	Charge Account	Account Type	Reconciled/Void	Contract	Ref Num	Ref Seq	Acct
CURRENT					Continued								
57186	10/07/26	SCOLE SCOLES SYSTEMS											
			26-01951	1	FIREHOUSE #1 SUPPLIES	341.00	6-01- -015-455 FIRE CO. BUILDING MAINT. # 1	Budget			13676	21	1
57187	10/07/26	STAPE STAPLES ADVANTAGE											
			26-01943	1	HEAVYWEIGHT FILE FOLDERS	33.88	6-01- -001-201 GENERAL OFFICE SUPPLIES	Budget			13676	15	1
			26-01943	2	DURACELL AA BATTERIES	17.26	6-01- -001-201 GENERAL OFFICE SUPPLIES	Budget			13676	16	1
						51.14							
57188	10/07/26	TECHNOLO TECHNOLOGY VISIONARIES LLC											
			26-01954	1	NETCARE COMPLETE-TOWN HALL	3,501.72	6-01- -003-264 COMPUTER SUPPORT	Budget			13676	27	1
			26-01954	2	BDR AGREEMENT-TOWN HALL	329.65	6-01- -003-264 COMPUTER SUPPORT	Budget			13676	28	1
			26-01954	3	NETCARE COMPLETE-POLICE DEPT	2,401.39	6-01- -017-264 COMPUTER SUPPORT	Budget			13676	29	1
			26-01954	4	OFFICE 365-POLICE DEPT.	703.20	6-01- -017-264 COMPUTER SUPPORT	Budget			13676	30	1
			26-01954	5	BDR AGREEMENT-POLICE DEPT.	219.40	6-01- -017-264 COMPUTER SUPPORT	Budget			13676	31	1
			26-01954	6	NETCARE COMPLETE-RECREATION	453.14	6-01- -023-264 COMPUTER SUPPORT	Budget			13676	32	1
			26-01954	7	NETCARE COMPLETE-PUBLIC WORKS	598.68	6-01- -027-264 COMPUTER SUPPORT	Budget			13676	33	1
			26-01954	8	OFFICE 365-TOWN HALL	1,111.20	6-01- -003-264 COMPUTER SUPPORT	Budget			13676	34	1
						9,318.38							
57189	10/07/26	TONYSGEN TONY'S GENERAL MERCHANDISE INC											
			26-01541	1	UNIFORMS - CODE ENFORCEMENT	167.97	6-01- -032-205 WEARING APPAREL, UNIFORMS	Budget			13676	1	1
57190	10/07/26	TRIPLED TRIPLE D TRAVEL											
			26-01906	1	SENIOR CITIZEN TRIP 11-05-26	1,550.00	6-01- -023-241 CONTRIBUTIONS TO SENIOR CITIZENS	Budget			13676	3	1
57191	10/07/26	TWORI THE TWO RIVER TIMES											
			26-01984	1	PUBLIC LEGAL NOTICE	20.46	6-01- -001-218 ADVERTISING	Budget			13676	41	1
57192	10/07/26	VECCHIO ANTHONY J. VECCHIO											
			26-01921	1	PROFESSIONAL SVS - SEPT 2026	2,041.66	6-01- -006-321 PROSECUTOR	Budget			13676	6	1
57193	10/07/26	VERALPH V.E. RALPH & SON, INC.											
			26-01923	1	MEDICAL SUPPLIES-FIRST AID	235.83	6-01- -018-421 CONTRIBUTIONS TO FIRST AID	Budget			13676	8	1

Check #	Check Date	Vendor	PO #	Item	Description	Amount Paid	Charge Account	Account Type	Reconciled/Void	Ref Num	Contract	Ref Seq	Acct
CURRENT					Continued								
57194	10/07/26	VERCOURT VERIZON								13676			
			26-01925	1	A/C#957-343-980-0001-83 COURT	269.00	6-01- -034-903 TELEPHONE-BUILDINGS & GROUNDS	Budget		10		1	
			26-01961	1	A/C357344691000138 TWN HALL TV	257.17	6-01- -034-903 TELEPHONE-BUILDINGS & GROUNDS	Budget		38		1	
						526.17							
57195	10/07/26	VERICONN VERIZON								13676			
			26-01942	1	VERIZON CONNECT-OCT 2026	379.95	6-01- -027-297 GPS MAINTENENACE	Budget		14		1	
57196	10/08/26	AMAZON AMAZON CAPITAL SERVICES								13679			
			26-01987	1	OFFICE SUPPLIES	36.42	6-01- -003-201 GENERAL OFFICE SUPPLIES	Budget		7		1	
57197	10/08/26	CHIESA CHIESA SHAHINIAN & GIANTOMASI								13679			
			26-01989	1	COAH DJ ACTION	24,884.60	6-01- -006-347 AFFORDABLE HOUSING	Budget		9		1	
57198	10/08/26	SIGNS IMAGE360								13679			
			26-01993	1	DECALS-HISTORIC PRESERVATION	65.00	6-01- -036-219 PRINTING, BINDING & CODIFICAT.	Budget		11		1	
57199	10/08/26	STAPE STAPLES ADVANTAGE								13679			
			26-01970	1	AVERY ADDRESS LABELS	30.78	6-01- -041-201 GENERAL OFFICE SUPPLIES	Budget		1		1	
			26-01970	2	SWINGLINE STAPLES	7.61	6-01- -041-201 GENERAL OFFICE SUPPLIES	Budget		2		1	
			26-01970	3	POST IT NOTES 3"X 3" CANARY	13.50	6-01- -041-201 GENERAL OFFICE SUPPLIES	Budget		3		1	
			26-01970	4	VERBATIM SLEEVE FOR CD/DVD	5.56	6-01- -041-201 GENERAL OFFICE SUPPLIES	Budget		4		1	
			26-01970	5	HP 37A BLACK STANDARD YIELD	204.77	6-01- -041-201 GENERAL OFFICE SUPPLIES	Budget		5		1	
			26-01970	6	TRU RED 8.5"X 11" COPY PAPER	135.72	6-01- -041-201 GENERAL OFFICE SUPPLIES	Budget		6		1	
						397.94							
57200	10/08/26	STRONG STRONG ROOTS TURF								13679			
			26-01988	1	PARKS/SPORTS FIELDS - ROUND 5	7,235.00	6-01- -008-207 AGRICULTURAL SUPPLIES	Budget		8		1	
57201	10/08/26	VERIZON VERIZON WIRELESS								13679			
			26-01992	1	A/C#242040738-00002 FIRST AID	45.20	6-01- -018-421 CONTRIBUTIONS TO FIRST AID	Budget		10		1	
			26-01994	1	A/C#242040738-00001 FIRST AID	95.40	6-01- -018-421 CONTRIBUTIONS TO FIRST AID	Budget		12		1	
						140.60							
57202	10/08/26	CESCHERT CHRISTINE ESCHERT								13681			
			26-01996	1	MILEAGE/TOLL/PARKING REIMBURSE	142.22	6-01- -003-281 TRAVEL, CONF. & TRAIN. FEES	Budget		1		1	

Check # / Check Date / Vendor / PO # / Item	Description	Amount Paid	Charge Account	Account Type	Reconciled/Void / Contract	Ref Num / Ref Seq / Acct
CURRENT	Continued					
57203 10/13/26 ATLPLUMB ATLANTIC PLUMBING SUPPLY CORP						
26-01964 1	LIBRARY SINK FIX SUPPLIES	300.09	6-01- -008-233 MAINT & REPAIRS OF FACILITY	Budget		13682 3 1
26-01966 1	SINK FAUCET/FAUCET W/HANDLES	274.95	6-01- -008-233 MAINT & REPAIRS OF FACILITY	Budget		5 1
		575.04				
57204 10/13/26 BARG BARG'S LAWN						
26-01965 1	DPW VARIOUS PARTS	1,104.05	6-01- -027-256 MAINT. & REPAIRS EQUIPMENT	Budget		13682 4 1
57205 10/13/26 COOPER3 COOPER ELECTRIC						
26-01969 1	CABLE CUTTER/FLOOD LIGHTS	423.09	6-01- -008-233 MAINT & REPAIRS OF FACILITY	Budget		13682 8 1
57206 10/13/26 F C AUTO F & C AUTOMOTIVE SUPPLY, INC.						
26-01975 1	DPW VARIOUS PARTS - SEPT 2026	939.64	6-01- -027-256 MAINT. & REPAIRS EQUIPMENT	Budget		13682 12 1
57207 10/13/26 GREENWAY GREENWAY INDUSTRIES OF NJ, INC						
26-01972 1	ASPHALT	206.36	6-01- -027-231 RD. SFTY & TRAFFIC SUPP/MAT	Budget		13682 10 1
57208 10/13/26 KELL5 KELLY WINTHROP, LLC						
26-01976 1	DEER CARCASS REMOVAL-SEPT.2026	250.00	6-01- -021-441 ANIMAL CONTROL REGULATIONS	Budget		13682 13 1
57209 10/13/26 L BADER LOUIS BADER						
26-01971 1	REIMBURSEMENT-9/26 STORM FOOD	98.70	6-01- -028-209 FOOD PURCHASES, SUPPLIES	Budget		13682 9 1
57210 10/13/26 RIVERVIE RIVERVIEW LANDSCAPES						
26-01980 1	LANDSCAPING - OCTOBER 2026	11,748.25	6-01- -027-299 GRASS CUTTING SERVICES	Budget		13682 14 1
57211 10/13/26 SCOLE SCOLES SYSTEMS						
26-01967 1	DPW SUPPLIES	956.86	6-01- -008-208 JANITORIAL & HOUSEHOLD SUPP	Budget		13682 6 1
26-01967 2		453.00	6-01- -008-233 MAINT & REPAIRS OF FACILITY	Budget		7 1
		1,409.86				
57212 10/13/26 STAPE STAPLES ADVANTAGE						
26-01944 1	OFFICE SUPPLIES - DPW	49.04	6-01- -027-201 GENERAL OFFICE SUPPLIES	Budget		13682 1 1
26-01944 2	PRINTER PAPER	168.96	6-01- -027-203 COPY MACHINE SUPPLIES	Budget		2 1
		218.00				
57213 10/13/26 TRE13 TREASURER, STATE OF NEW JERSEY						
26-01981 1	3RD QTR MARRIAGE/CIVIL UNION	375.00	6-01- -910-021 DUE STATE-MARRIAGE LIC. FEE	Budget		13682 15 1

Check # / Check Date / Vendor / PO # / Item	Description	Amount Paid	Charge Account	Account Type	Reconciled/Void / Contract	Ref Num / Ref Seq / Acct
CURRENT	Continued					
57214 10/13/26	TREASDIV TREASURER, STATE OF NEW JERSEY					13682
26-01973 1	PESTICIDE LICENSING- L. BADER	80.00	6-01- -027-282 PROF. MEMBERSHIP DUES	Budget		11 1

Checking Account Totals	Paid	Void	Amount Paid	Amount Void
Checks:	48	0	121,620.03	0.00
Direct Deposit:	0	0	0.00	0.00
Total:	48	0	121,620.03	0.00

Check # / Check Date / Vendor / PO # / Item	Description	Amount Paid	Charge Account	Account Type	Reconciled/Void / Contract	Ref Num / Ref Seq / Acct
CURWIRE	CURRENT WIRES					
100126 10/02/26	DELTA DELTA DENTAL OF NJ, INC.					13671
26-01835 1	ADMINISTRATION-DENTAL BENEFITS	2,194.10	6-01- -014-405 DENTAL	Budget		1 1
26-01835 2	POLICE DEPT-DENTAL BENEFITS	2,801.96	6-01- -014-405 DENTAL	Budget		2 1
		4,996.06				
100226 10/07/26	NECCLOUD NEC CLOUD COMMUNICATIONS					13677
26-01952 1	TELEPHONE-RECREATION OCT 2026	51.24	6-01- -034-903 TELEPHONE-BUILDINGS & GROUNDS	Budget		1 1
100326 10/07/26	JCPL8 JCP&L/REMITTANCE PROCES. CTR					13677
26-01936 1	A/C#100012462147/STREET LIGHTS	590.95	6-01- -029-481 STREET LIGHTING	Budget		2 1
100526 10/07/26	JCPL8 JCP&L/REMITTANCE PROCES. CTR					13677
26-01934 1	A/C200000054375-MASTER ACCT	1,667.02	T-04- -017-274 UTILITIES	Budget		3 1
100926 10/07/26	VERIZON1 VERIZON					13677
26-01937 1	FIOS INTERNET SVS-POLICE	237.35	6-01- -034-903 TELEPHONE-BUILDINGS & GROUNDS	Budget		4 1
101126 10/07/26	PITN1 PITNEY BOWES INC/NATL BUS CTR					13677
26-01933 1	LEASED EQUIPMENT	1,137.24	6-01- -001-225 MAINT & REPAIR OFFICE EQUIP	Budget		5 1
101226 10/07/26	BELL2 VERIZON					13677
26-01935 1	AC#357068277000150-BLD UTILITY	692.53	6-01- -034-903 TELEPHONE-BUILDINGS & GROUNDS	Budget		6 1
101526 10/07/26	COLT1 COLTS NECK BOARD OF EDUCATION					13677
26-01927 1	LOCAL SCHOOL TAXES-OCT 2026	1,600,758.00	6-01- -910-017 LOCAL SCHOOL TAX	Budget		7 1
101626 10/07/26	SPRAGUE SPRAGUE OPERATING RESOURCES					13677
26-01940 1	NJ NATURAL GAS-124 CEDAR DR.	22.33	6-01- -034-703 NATURAL GAS-BUILDINGS AND GROUNDS	Budget		8 1
102026 10/07/26	NJ NA NJ NATURAL GAS COMPANY					13677
26-01960 1	A/C#230000366326/RECREATION	55.00	6-01- -034-703 NATURAL GAS-BUILDINGS AND GROUNDS	Budget		9 1

Check # / Check Date / Vendor / PO # / Item	Description	Amount Paid	Charge Account	Account Type	Reconciled/Void / Contract	Ref Num / Ref Seq / Acct
CURWIRE	CURRENT WIRES Continued					
102026 NJ NATURAL GAS COMPANY	Continued					
26-01960 2	A/C#230000071882/MUNI BLDG	58.48	6-01- -034-703 NATURAL GAS-BUILDINGS AND GROUNDS	Budget		10 1
26-01960 3	A/C#230000071639/LIBRARY	55.00	6-01- -034-703 NATURAL GAS-BUILDINGS AND GROUNDS	Budget		11 1
26-01960 4	A/C#230000702729/BUCKS MILL	55.00	6-01- -034-703 NATURAL GAS-BUILDINGS AND GROUNDS	Budget		12 1
		223.48				
102426 10/07/26	VERCOURT VERIZON					13677
26-01955 1	ACCOUNT #157-247-846-0001-54	279.00	6-01- -044-584 INTERLOCAL HOLMDEL COURT	Budget		13 1
103026 10/07/26	FRH F.R.H.S. DISTRICT BD OF ED					13677
26-01928 1	REGIONAL SCHOOL TAXES OCT 2026	1,154,131.00	6-01- -910-018 REGIONAL SCHOOL TAXES	Budget		14 1
103126 10/07/26	NHC NEW HORIZON COMMUNICATIONS					13677
26-01948 1	MUNICIPAL BLDG PHONE BILL	560.48	6-01- -034-903 TELEPHONE-BUILDINGS & GROUNDS	Budget		15 1
102126 10/08/26	NJ NA NJ NATURAL GAS COMPANY					13680
26-01995 1	A/C#230000347693/FIRST AID	58.48	6-01- -018-421 CONTRIBUTIONS TO FIRST AID	Budget		1 1
102326 10/08/26	VERIZON1 VERIZON					13680
26-01991 1	INTERNET - COURT	100.64	6-01- -034-903 TELEPHONE-BUILDINGS & GROUNDS	Budget		2 1
102526 10/08/26	VERIZON1 VERIZON					13680
26-01990 1	PARK & REC FIOS INTERNET SVS	99.00	6-01- -034-903 TELEPHONE-BUILDINGS & GROUNDS	Budget		3 1

Checking Account Totals	Paid	Void	Amount Paid	Amount Void
Checks:	16	0	2,765,604.80	0.00
Direct Deposit:	0	0	0.00	0.00
Total:	16	0	2,765,604.80	0.00

ESC						
2369 10/08/26	CNCC COLTS NECK COMMUNITY CHURCH					13678
ESC06617 1	REFUND RESOLUTION 2026-184	81.58	CHURCH754 CN COMMUNITY CHURCH-PB#754 SUB	Project		1 1

Checking Account Totals	Paid	Void	Amount Paid	Amount Void
Checks:	1	0	81.58	0.00
Direct Deposit:	0	0	0.00	0.00
Total:	1	0	81.58	0.00

GRANT1	GRANT CHECKING ACCOUNT					
2816 10/13/26	SCOLE SCOLES SYSTEMS					13683
26-01967 3		376.16	G-03- -155-202 MISCELLANEOUS	Budget		1 1

Check #	Check Date	Vendor	PO #	Item	Description	Amount Paid	Charge Account	Account Type	Reconciled/Void	Ref Num	Contract	Ref Seq	Acct

GRANT1 GRANT CHECKING ACCOUNT Continued

Checking Account Totals

	Paid	Void	Amount Paid	Amount Void
Checks:	1	0	376.16	0.00
Direct Deposit:	0	0	0.00	0.00
Total:	1	0	376.16	0.00

Report Totals

	Paid	Void	Amount Paid	Amount Void
Checks:	76	0	2,941,015.18	0.00
Direct Deposit:	0	0	0.00	0.00
Total:	76	0	2,941,015.18	0.00

Totals by Year-Fund Fund Description	Fund	Budget Total	Revenue Total	G/L Total	Total
CURRENT FUND	6-01	2,885,557.81	0.00	0.00	2,885,557.81
CAPITAL FUND	C-02	40,000.00	0.00	0.00	40,000.00
DOG TRUST	D-06	13.20	0.00	0.00	13.20
FEDERAL & STATE GRANTS	G-03	376.16	0.00	0.00	376.16
TRUST	T-04	14,986.43	0.00	0.00	14,986.43
Total Of All Funds:		2,940,933.60	0.00	0.00	2,940,933.60

Project Description	Project No.	Project Total
CN COMMUNITY CHURCH-PB#754 SUB	CHURCH754	81.58
Total Of All Projects:		81.58

RESOLUTION 2026-187

EXECUTIVE SESSION

WHEREAS, the Open Public Meetings Act, N.J.S.A. 10:4-12(b), permits the exclusion of the public from a meeting in certain circumstances; and

WHEREAS, the Colts Neck Township Committee finds that such circumstances presently exist.

NOW, THEREFORE, BE IT RESOLVED by the Colts Neck Township Committee as follows:

1. The public shall be excluded from discussion of any action upon hereinafter specified subject matter;

2. The general nature of the subject matter to be discussed is as follows:

    a. Potential litigation confidential pursuant to N.J.S.A. 10:4-12(b)(7);

    b. Property Acquisition pursuant to N.J.S.A. 10:4-12(b)(5);

3. The Committee may take action during closed executive session;

4. It is anticipated that the closed session will last approximately thirty (30) minutes;

5. It is anticipated at this time the above-stated subject matter(s) will be made public when the need for confidentiality no longer exists; and

6. This Resolution shall become effective immediately.

I, Kathleen Capristo, do hereby certify the foregoing to be a true and accurate copy of a Resolution passed by the Township Committee of Colts Neck Township during a special meeting held on the 14th day of October 2026.

_____

Kathleen Capristo, Municipal Clerk

RECORD OF VOTE					
	M S	Yes	No	NV	Ab
Mayor Viola					
Deputy Mayor Buzzetta					
Rizzuto					
Torchia Buss					
Tobia					
M - Moved S - Seconded X - indicates vote NV - Not Voting Ab - Absent					

RESOLUTION 2026-188

AUTHORIZING AND APPROVING ADDENDUM TO EMPLOYMENT AGREEMENT - JOHN ANTONIDES

WHEREAS, the Township entered into an employment agreement (the "Agreement") with John Antonides (the "Employee"), who serves in the positions of Chief Financial Officer, Tax Collection, Qualified Purchasing Agent, and Tax Search Officer for Colts Neck Township on September 9, 2026; and

WHEREAS, the Township wishes to add an addendum this Agreement for the period effective November 1, 2026 through July 31, 2027; and

WHEREAS, the Mayor and Township Committee have reviewed and agree to the terms and conditions of the Addendum.

NOW, THEREFORE, BE IT RESOLVED, by the Township Committee of Colts Neck Township in the County of Monmouth, State of New Jersey that Township Administrator is hereby authorized and directed to execute the Addendum between Colts Neck Township and John Antonides attached hereto; and

BE IT FURTHER RESOLVED that a copy of this resolution be forwarded to the following:

1. John Antonides, Chief Financial Officer;

I, Kathleen Capristo, do hereby certify the foregoing to be a true and accurate copy of a Resolution passed by the Township Committee of Colts Neck Township during a special meeting held on the 14th of October 2026.

_____
Kathleen Capristo, Municipal Clerk

RECORD OF VOTE					
	M	S	Yes	No	NV	Ab
Mayor Viola						
Deputy Mayor Buzzetta						
Rizzuto						
Torchia Buss						
Tobia						
M - Moved S - Seconded X - indicates vote			NV - Not Voting		Ab - Absent	

RESOLUTION 2026-189

CONFIRMING APPOINTMENT OF
MID JERSEY JOINT INSURANCE FUND COMMISSIONER
JOHN ANTONIDES

BE IT RESOLVED by the Township Committee of Colts Neck Township that it hereby appoints Mr. John Antonides as Commissioner of the Mid Jersey Joint Insurance Fund to fulfill the unexpired term of Kathleen Capristo effective November 1, 2026; and

BE IT FURTHER RESOLVED that a copy of this resolution be forwarded to the following:

1. John Antonides; and
2. Mid Jersey Joint Insurance Fund.

I, Kathleen Capristo, do hereby certify the foregoing to be a true and accurate copy of a Resolution passed by the Township Committee of Colts Neck Township during a special meeting held on the 14th day of October 2026.

_____
Kathleen Capristo, Municipal Clerk

RECORD OF VOTE					
	M S	Yes	No	NV	Ab
Mayor Viola					
Deputy Mayor Buzzetta					
Rizzuto					
Torchia Buss					
Tobia					
M - Moved S - Seconded X - indicates vote		NV - Not Voting		Ab - Absent	

RESOLUTION 2026-190

RESOLUTION AUTHORIZING ACCEPTANCE OF HALLOWEEN HAYRIDE SERVICES FROM ATLANTIC FARMS, INC.

WHEREAS, Colts Neck Township ("Township") has received a generous offer from Atlantic Farms, Inc., ("Atlantic Farms") a New Jersey corporation located at 1506 Atlantic Ave, Manasquan, NJ 08736, to donate hayride services including use of a tractor and hay wagon for the Township's 2026 Halloween Haunted Hayride scheduled for October 24, 2026 with a rain date of October 25, 2026 as sponsored by the Township Historical Preservation Committee; and

WHEREAS, this donation is made after both Atlantic Farms and the Township have presented to each other insurance information satisfying both parties that each is properly insured for the Hayride occasion; and

WHEREAS, it is understood Atlantic Farms carries insurance coverage relating to hayrides; and

WHEREAS, pursuant to N.J.S.A. 40:12-29, the Township is allowed to accept donations, of services by private persons for the purpose of public open space preservation or the establishment and maintenance of public parks, forests, recreation areas, or wildlife management areas, preserves, or sanctuaries; and

WHEREAS, the Township Committee has considered the benefits of Atlantic Farms' offer of donation and has found that accepting this generous donation will be in the best interest of the municipality.

NOW, THEREFORE, BE IT RESOLVED by the Township Committee of Colts Neck Township that the donation by Atlantic Farms, Inc. of 1506 Atlantic Ave, Manasquan, NJ 08736, of hayride services including use of a tractor and hay wagon for the Township's 2026 Halloween Haunted Hayride is hereby accepted pursuant to N.J.S.A. 40:12-29.

BE IT FURTHER RESOLVED that the Township Attorney, Mayor, and/or Township Administrator/Clerk are hereby authorized to execute all such documents and instruments necessary to effectuate the foresaid donation.

I, Kathleen Capristo, do hereby certify the foregoing to be a true and accurate copy of a Resolution passed by the Township Committee of Colts Neck Township during a special meeting held on the 14th day of October 2026.

_____

Kathleen Capristo, Municipal Clerk

RECORD OF VOTE					
	M S	Yes	No	NV	Ab
Mayor Viola					
Deputy Mayor Buzzetta					
Rizzuto					
Torchia Buss					
Tobia					
M - Moved S - Seconded X - indicates vote		NV - Not Voting		Ab - Absent	

RESOLUTION 2026-191

ACCEPTING THE RESIGNATION OF
TOWNSHIP EMPLOYEE
TOM FRANK

BE IT RESOLVED by the Township Committee of Colts Neck Township that it hereby acknowledges the receipt of and accepts the resignation of Tom Frank Cardoso effective October 31, 2026.

BE IT FURTHER RESOLVED that a copy of this resolution be forwarded to the following:

1. John Antonides, Chief Financial Officer

I, Kathleen Capristo, do hereby certify the foregoing to be a true and accurate copy of a Resolution passed by the Township Committee of Colts Neck Township during a special meeting held on the 14th day of October 2026.

Kathleen Capristo, Municipal Clerk

RECORD OF VOTE					
	M S	Yes	No	NV	Ab
Mayor Viola					
Deputy Mayor Buzzetta					
Rizzuto					
Torchia Buss					
Tobia					

M - Moved S - Seconded X - indicates vote NV - Not Voting Ab - Absent

RESOLUTION 2026-192

AUTHORIZING REFUND OF THE BALANCE OF 2025 PROPERTY TAXES

BE IT RESOLVED by the Township Committee of Colts Neck Township, that upon recommendations of the Tax Assessor, 4th Quarters 2025 taxes be cancelled due to an exemption on the following property:

CANCEL 4TH QUARTER TAXES

42	1	Monmouth County Park System 68 Matthew Road	2025	4	$ 10.62

BE IT FURTHER RESOLVED that a copy of this resolution be forwarded to the following:

1. Monmouth County Park System and
2. John Antonides, Chief Financial Officer.

I, Kathleen Capristo, do hereby certify the foregoing to be a true and accurate copy of a Resolution passed by the Township Committee of Colts Neck Township during a special meeting held on the 14th day of October 2026.

Kathleen Capristo, Municipal Clerk

RECORD OF VOTE					
	M S	Yes	No	NV	Ab
Mayor Viola					
Deputy Mayor Buzzetta					
Rizzuto					
Torchia Buss					
Tobia					
M - Moved S - Seconded X - indicates vote		NV - Not Voting		Ab - Absent	

RESOLUTION 2026-193

APPOINTING PART-TIME WELL INSPECTOR GUS BAXES

WHEREAS, the Health Officer recommends appointing Gus Baxes as Part-time Well Inspector; and

WHEREAS, the Chief Financial Officer has certified that funds are available for same.

NOW THEREFORE, BE IT RESOLVED by the Township Committee of Colts Neck Township in the County of Monmouth, State of New Jersey, that it hereby confirms the appointment of Gus Baxes at a rate of $2,000 per annum effective October 1, 2026; and

BE IT FURTHER RESOLVED that a copy of this resolution be forwarded to the following:

1. John Antonides, Chief Financial Officer; and
2. Gus Baxes.

I, Kathleen Capristo, do hereby certify the foregoing to be a true and accurate copy of a Resolution passed by the Township Committee of Colts Neck Township during a special meeting held on the 14th day of October 2026.

Kathleen Capristo, Municipal Clerk

RECORD OF VOTE					
	M S	Yes	No	NV	Ab
Mayor Viola					
Deputy Mayor Buzzetta					
Rizzuto					
Torchia Buss					
Tobia					
M - Moved S - Seconded X - indicates vote		NV - Not Voting		Ab - Absent	

RESOLUTION 2026-194

CONFIRMING HIRING OF COLTS NECK TOWNSHIP CODE ENFORCEMENT OFFICER VICTOR HUHN

WHEREAS, the Township wishes to hire Victor Huhn, as a full-time Code Enforcement Officer; and

WHEREAS, the Chief Financial Officer has certified that funds are available; and

NOW THEREFORE, BE IT RESOLVED by the Township Committee of Colts Neck Township in the County of Monmouth, State of New Jersey, that it hereby confirms the hiring of Victor Huhn, as a full-time Code Enforcement Officer at $85,000/annual, effective October 19, 2026; and

BE IT FURTHER RESOLVED that a copy of this resolution be forwarded to the following:

1. John Antonides, Chief Financial Officer; and
2. Victor Huhn.

I, Kathleen Capristo, do hereby certify the foregoing to be a true and accurate copy of a Resolution passed by the Township Committee of Colts Neck Township during the regular meeting held on the 14th day of October 2026.

_____
Kathleen Capristo, Municipal Clerk

RECORD OF VOTE					
	M S	Yes	No	NV	Ab
Mayor Viola					
Deputy Mayor Buzzetta					
Rizzuto					
Torchia Buss					
Tobia					
M - Moved S - Seconded X - indicates vote		NV - Not Voting		Ab - Absent	

MAYOR'S PROCLAMATION

BREAST CANCER AWARENESS MONTH WITHIN COLTS NECK TOWNSHIP OCTOBER 2026

WHEREAS, breast cancer is the most common cancer among women in the United States, other than skin cancer, and

WHEREAS, the chance of a woman having invasive breast cancer some time during her life is approximately 1 in 8 (13%) in the US. The chance of dying from breast cancer is 1 in 35, and

WHEREAS, the National Cancer Institute estimates in the United States more than 300,000 women will be diagnosed with breast cancer this year and more than 42,000 people will die, and

WHEREAS, research has shown that taking advantage of early detection methods such as routine self-examination, clinical breast exams, and mammography, at the direction of a health care provider, could help drop the cancer rate by as much as 30 percent.

NOW, THEREFORE, BE IT RESOLVED, I, Michael Viola, Mayor of Colts Neck Township, together with the entire Colts Neck Township Committee do hereby proclaim October 2026 as *Breast Cancer Awareness Month* within Colts Neck Township and urge our residents to become aware of the importance of breast cancer prevention, detection, and treatment.

_____
Michale Viola
Mayor

_____
Kathleen Capristo, RMC
Municipal Clerk

October 14, 2026

MAYOR'S PROCLAMATION

RED RIBBON WEEK
WITHIN COLTS NECK TOWNSHIP
OCTOBER 23 - 31, 2026

WHEREAS, Alcohol and drug abuse in this Nation have reached epidemic stages; and

WHEREAS, It is imperative that visible, unified prevention education efforts by community members be launched to eliminate the demand for drugs; and

WHEREAS, The National Red Ribbon Campaign offers citizens the opportunity to demonstrate their commitment to drug-free lifestyles (no use of illegal drugs, no illegal use of legal drugs); and

WHEREAS, The National Red Ribbon Campaign will be recognized throughout our Nation during Red Ribbon Week, October 23-31, with this year's theme, "Make a Difference. Be a Hero. Stay Drug Free."; and

WHEREAS, business, government, law enforcement, media, medical institutions, religious institutions, schools, senior citizens, service organizations, parents, guardians and youth will demonstrate their commitment to healthy, drug-free lifestyles by wearing and displaying red ribbons during this week-long campaign.

NOW, THEREFORE, BE IT RESOLVED, I, Michael Viola, Mayor of Colts Neck Township, together with the entire Colts Neck Township Committee, do hereby recognize and proclaim the week of October 23-31, 2026 as Red Ribbon Week within Colts Neck Township and encourage our citizens to engage in drug prevention education, not only during Red Ribbon Week, but all year long, as the strong commitment to a drug-free Township.

Michale Viola
Mayor

Kathleen Capristo, RMC
Municipal Clerk

October 14, 2026

ORDINANCE 2026-19

AN ORDINANCE OF COLTS NECK TOWNSHIP IN THE COUNTY OF MONMOUTH, STATE OF NEW JERSEY, AMENDING SALARY AND WAGE ORDINANCE 2026-16

WHEREAS, Colts Neck Township (the "Township") regulates salaries pursuant to Salary and Wage Ordinance No. 2026-16; and

WHEREAS, the Township Committee wishes to amend Salary and Wage Ordinance No. 2026-16 to further define certain job titles and salary ranges; and

WHEREAS, the Township Committee finds it to be in the best interest of the citizens of the Township to amend Salary Ordinance No. 2026-16.

NOW, THEREFORE BE IT ORDAINED by the Township Committee of Colts Neck Township, in the County of Monmouth, State of New Jersey that the Township's Salary and Wage Ordinance No. 2026-16 is hereby amended as follows (additions to text indicated by ***bold italicized underline***; deletions to text indicated by ~~***bold italicized strikeout***~~):

Title	Department	Minimum	Maximum
Municipal Clerk/Public Information Officer	Administration	$85,000	$150,000
Registrar of Vital Statistics	Administration	$1,700	$2,300
Deputy Registrar of Vital Statistics	Administration	$1,100	$1,500
Clerical – Administration – Part-time	Administration	$13/Hour	$20/Hour
Code Enforcement Officer	Code Enforcement	$65,000	$90,000
Code Enforcement Officer – Part-time	Code Enforcement	$25/Hour	$40/Hour
Construction Official	Construction	$25,000	$55,000
Technical Assistant to Construction Official - Part-time	Construction	$25,000	$55,000
Technical Assistant to Construction Official – Assistant	Construction	$20,000	$50,000
Electric Inspector/Sub-Code Official	Construction	$23,500	$40,000
Building Inspector	Construction	$23,500	$40,000
Plumbing Inspector/Sub-Code Official	Construction	$30,700	$50,000
Plumbing Inspector	Construction	$12,000	$25,000
Building Inspector/Sub-Code Official/Fire Inspector	Construction	$35,000	$75,000
UCC Building Inspector	Construction	$15,000	$25,000
Building Inspector – Part-time	***Construction***	***$5,000***	***$15,000***

Title	Department	Minimum	Maximum
Director of Public Works	Department of Public Works	$78,000	$175,000
Foreman	Department of Public Works	$68,500	$150,000
Heavy Equipment Operator	Department of Public Works	$60,000	$90,000
Facility Maintenance Worker	Department of Public Works	$50,000	$85,000
Laborer	Department of Public Works	$40,000	$75,000
Mechanic	Department of Public Works	$45,000	$90,000
Mechanic — Part-time	Department of Public Works	$18/Hour	$35/Hour
Secretary to Director of Public Works	Department of Public Works	$40,000	$75,000
Convenience Center Attendant — Part-time	Department of Public Works	$15/Hour	$25/Hour
Seasonal Laborer — Part-time	Department of Public Works	$15/Hour	$25/Hour
Temporary Laborer	Department of Public Works	$25/Hour	$75/Hour
Finance Officer/Treasurer	Finance	$65,000	$140,000
Tax Collector/Tax Search Officer	Finance	$24,700	$55,000
Purchasing Agent	Finance	$3,000	$10,000
Deputy Treasurer/Deputy Tax Collector	Finance	$40,000	$75,000
Tax Clerk/Bookkeeper	Finance	$40,000	$75,000
Finance Clerk/Administrative Assistant — Clerk's Office	Finance	$40,000	$60,000
Shared Services Pay — Finance/Tax	Finance	$3,000	$25,000
Tax Assessor	Tax Assessment	$28,000	$55,000
Health Officer	Health Department	$85,000	$150,000
Well Inspector	Health Department	$1,500	$3,500
Municipal Court Judge	Municipal Court	$20,000	$45,000
Court Administrator	Municipal Court	$45,000	$90,000
Deputy Court Administrator	Municipal Court	$40,000	$75,000

Title	Department	Minimum	Maximum
Violations Clerk	Municipal Court	$35,000	$60,000
Township Planner	Planning & Zoning	$85,000	$150,000
Secretary to Planning Board and Board of Adjustment	Planning & Zoning	$35,000	$56,000
Police Chief	Police	$125,000	$225,000
Secretary to Police Chief	Police	$40,000	$70,000
Police Lieutenant	Police	$110,000	$200,000
SLEO III	Police	$25/Hour	$40/Hour
SLEO II Part-time	Police	$18/Hour	$25/Hour
Police Records Clerk	Police	$35,000	$55,000
Police Clerk — Part-time	Police	$14/Hour	$25/Hour
Director of Recreation and Parks	Recreation	$68,000	$110,000
Secretary Recreation and Parks	Recreation	$40,000	$65,000
Summer Camp Supervisor	Recreation	$20/Hour	$35/Hour
Summer Camp Assistant Supervisor	Recreation	$17/Hour	$25/Hour
Summer Camp Arts & Crafts Supervisor	Recreation	$14/Hour	$25/Hour
Summer Camp Outside Coordinator	Recreation	$12/Hour	$20/Hour
Summer Camp Trip Coordinator	Recreation	$12/Hour	$20/Hour
Summer Camp Counselor	Recreation	$11.90/Hour	$18/Hour
Summer Camp Counselor in Training	Recreation	$6/Hour	$15/Hour
Seasonal --- Part-time	Recreation	$15/Hour	$25/Hour
Fire Official	Fire Prevention	$20,000	$30,000
Fire Inspector -- Part-time	Fire Prevention	$8,000	$25,000
Smoke Certification Inspector	Fire Prevention	$2,000	$5,000
Fire Prevention Secretary - Part-time	Fire Prevention	$1,500	$3,500

Title	Department	Minimum	Maximum
Township Administrator	Administration	$110,000	$220,000
Interim Township Administrator	***Administration***	***$5,000/Month***	***$10,000/Month***
Mayor, Deputy Mayor and Committee Members	Elected Officials	$1,500	$3,500

SECTION ONE: Secretaries for the Farmland and Open Space Committee, Environmental Commission, and Historic Preservation Committee shall be paid at a rate of $10 per hour for clerical support and $50 per meeting attended.

SECTION TWO: The Township Committee shall establish those officials and employees of Colts Neck Township who are entitled to mileage compensation for the use of their personal vehicles. Such compensation is hereby fixed at the federal mileage reimbursement rate as determined by the Internal Revenue Service.

SECTION THREE: The Township Committee reserves the right to pay annual bonus payments not to exceed $5,000 to non-union personnel.

SECTION FOUR: All ordinances or parts of ordinances in conflict with this ordinance or any part thereof are hereby repealed.

SECTION FIVE: This ordinance shall take effect upon final passage and publication according to law.

The foregoing Ordinance was introduced and passed on the first reading at the meeting of the Township Committee of Colts Neck Township on September 30, 2026 and duly adopted by the Township Committee of Colts Neck Township after public hearing on October 14, 2026.

_____
Kathleen Capristo, Municipal Clerk

RECORD OF VOTE

	First Reading					Second Reading				
	September 30, 2026					October 14, 2026				
	M	S	Yes	No	NV	Ab	M	S	Yes	No	NV	Ab
Mayor Viola			X									
Deputy Mayor Buzzetta			X									
Rizzuto		S	X									
Torchia Buss		M	X									
Tobia			X									

M - Moved S - Seconded X - indicates vote NV - Not Voting Ab - Absent

ORDINANCE 2026-20

ORDINANCE AMENDING CHAPTER 98 "CONSTRUCTION CODES, UNIFORM" OF THE CODE OF THE TOWNSHIP OF COLTS NECK, COUNTY OF MONMOUTH, AND STATE OF NEW JERSEY TO REMOVE PORTIONS OF THE SECTION OF THE CODE RELATING TO CONSTRUCTION PERMIT FEES

WHEREAS, the New Jersey Department of Community Affairs ("DCA") oversees municipal regulations of construction concerns, including the setting of fees for construction permits; and

WHEREAS, the DCA has reviewed the Colts Neck Township code relating to construction permit fees; and

WHEREAS, the DCA has determined several provisions of the Township's ordinance relating to permit fees should be removed via amendment.

NOW THEREFORE BE IT ORDAINED, by the Township Committee of Colts Neck Township, County of Monmouth, and State of New Jersey, as follows (additions to text indicated by **bold italicized underline**; deletions to text indicated by ~~***bold italicized strikeout***~~):

SECTION 1. Chapter 98 of the Code of the Township of Colts Neck shall be amended as follows:

§ 98-3 Construction permit fees.

A. Plan review fee. The plan review fee shall be 20% of the amount to be charged for a permit. Plan review fees are not refundable. Plan review fee for initial submission: Two hundred dollars will be deducted from final cost of the permit.

B. Basic construction fee. The basic construction fee shall be the sum of the parts computed on the basis of the volume or the cost of construction, the number of plumbing fixtures and devices, the number of sprinklers, standpipes and the heat and smoke detectors at the unit rates, electrical devices and equipment provided herein, plus any special fees.

C. Building subcode fees.

(1) New construction: The fee shall be based on the total volume in cubic feet of the structure or structures, as the case may be, multiplied by the applicable cost per cubic foot.

(a) Use Groups H, I-1, I-2, I-3, E, R-1, R-2, R-3, R-4, and R-5: $0.034 per cubic foot.

(b) Use Groups A-1, A-2, A-3, A-4, A-5, F-1, F-2, B, M, U, S-1 and S-2 structures on farms, including commercial farm buildings: $0.030 per cubic foot.

(2) Additions. The fees for additions shall be computed on the same basis as for new construction for the added portion.

(3) Reconstruction alterations, renovations and repairs.

(a) For estimated cost ~~***up to and including $100,000***~~:

[1] Use Groups R-1, R-2, R-3, R-4, R-5, and U: $32 per $1,000.

[2] Use Groups A-1, A-2, A-3, A-4, A-5, B, E, F-1, F-2, H, I-1, I-2, I-3, M, S-1 and S-2: $36 per $1,000.

~~***(b) If the cost exceeds $100,000, there shall be an additional charge as follows:***~~

~~***[1] Use Groups R-1, R-2, R-3, R-4, R-5, and U: $20 per $1,000.***~~

~~***[2] Use Groups A-1, A-2, A-3, A-4, A-5, B, E, F-1, F-2, H, I-1, I-2, I-3, M, S-1 and S-2: $20 per $1,000.***~~

(b)~~(c)~~ The applicant shall submit to the Construction Code Official such data as may be available to provide a bona fide estimated cost. The Construction Official shall make the final decision regarding estimated cost.

(4) The combination fee for renovations and additions shall be the sum of the fees computed separately in accordance with Subsections C, D, & E.

~~*(5) Roofing and siding fees.*~~

~~*(a) As per alteration fee: $25 per thousand (minimum charge $100).*~~

(5)~~(6)~~ Minimum fee for building subcode permits: $75.

(6)~~(7)~~ Wind/solar electric systems:

(a) R-5 roof or ground installation: as per Subsection E.

(b) All other types: $32 per thousand.

(7)~~(8)~~ Installation of swimming pools.

(a) Construction of a swimming pool, inground or aboveground: $32 per $1,000.

(8)~~(9)~~ Temporary pools/spas/hot tub (maximum 90 days): $75.

(9)~~(10)~~ Construction of accessory structures, storage sheds, etc.: $25 per $1,000.

(10)~~(11)~~ Demolition and removal of structures:

(a) Accessory structure (Type U) under 300 square feet: $200.

(b) One- and two-family structures (Use Group R-5) up to 3,000 square feet: $500.

(c) All structures (except multistory structures) above 3,001 square feet: $1,000.

(d) Multistory structures will be priced to the alteration cost schedule.

(11)~~(12)~~ Demolition or removal or abandonment of tanks:

(a) Demolition or removal of tanks up to 1,000 gallons: $175.

(b) Demolition or removal of tanks 1,001 to 5,000 gallons: $225.

(c) Demolition or removal of tanks above 5,001 gallons: $300.

(12)~~(13)~~ Satellite dishes and radio transceiver equipment:

(a) Installation of a satellite dish or radio, television or other transceiver equipment for residential use: $40.

(b) Installation of a satellite dish or radio, television or other transceiver equipment for nonresidential or commercial use: $250.

(13)~~(14)~~ Asbestos hazard abatement, for each construction permit issued: $75.

(14)~~(15)~~ Lead hazard abatement, for each construction permit issued: $75.

(15)~~(16)~~ Tents and temporary structures. For purposes of this subsection, tents and temporary structures are defined by N.J.A.C. 5:23-2.14(b)4.

(a) Tents without appurtenances in excess of 900 square feet or more than 30 feet in any dimension, excluding canopies: $100.

(b) The permit fee for a temporary structure used for construction or other activities whose life is limited to not more than one year: $200.

(16)~~(17)~~ Signs. The fee to construct a sign shall be in the amount of $2 per square foot of surface area of the sign, computed on one side only for double-faced signs, which are in allowance with the UCC regulations.

(17)~~(18)~~ Change of contractor (permit update): minimum fee per subcode.

D. Electrical fees.

(1) Switching, lighting, receptacle and solar panels (devices of less than one horsepower or one kilowatt included):

(a) One to 50: $75.

(b) Each additional 25: $25.

(2) Each service panel, meter, subpanel, disconnect or meter stack, etc.:

(a) Up to 200 amperes: $75.

(b) Up to 201 to 400 amperes: $150.

(c) Larger than above 401 to 600 amperes: $300.

(d) Above 601 to 1,000 amperes: $500.

(e) Over 1,000 amperes: $700.

(3) Transformers, generators, alternative generating systems, each:

(a) One to 10 kilowatts: $50.

(b) Eleven to 45 kilowatts: $125.

(c) Fourty-six to 112.5 kilowatts: $300.

(d) Larger than 112.5 kilowatts: $525.

(e) Solar, wind, hydro inverters, each: $50.

(4) Motors and electrical devices (control equipment, heating, air handling, compressor, heat pump, air handler, strip heater, water heater, dryer, oven, range, furnace and dishwasher, etc.):

(a) One to 10 horsepower: $25.

(b) Eleven to 50 horsepower: $50.

(c) Fifty one to 100 horsepower: $100.

(d) Larger than 100 horsepower: $325.

(5) Annual electrical inspection fee for bonding and grounding certificates for commercial pools, spas and hot tubs: $75 (commercial).

(6) Five-year bonding and grounding test: $125 (commercial).

(7) Furnace and air conditioner replacement, residential only:

(a) Direct replacement HVAC equipment: $75 each for the first two, $25 per piece after the first two.

(8) Wind/solar electric systems as per item cost above.

(9) The minimum fee for electrical permits shall be $75.

E. Fire protection fees.

(1) Smoke, heat and CO detectors:

(a) Five or less: $40.

(b) Each additional 15: $20.

(2) Alarm devices (heat pulls, water flow):

(a) Five or less: $40.

(b) Each additional 15: $25.

(3) Supervisory devices (tampers, low/high air) or signaling devices (horns/strobes, bells):

(a) Five or fewer: $40.

(b) Each additional 15: $25.

(4) Sprinkler heads (wet or dry):

(a) Ten or fewer: $50.

(b) Eleven to 100: $120.

(c) One hundred one to 200: $250.

(d) Two hundred one to 400: $600.

(e) Four hundred one to 600: $1,000.

(5) Standpipes: $300 each.

(6) Kitchen exhaust systems (commercial): $100 each.

(7) All fireplaces (wood or gas): $50 each.

(8) Gas- and oil-fired appliance that is connected to plumbing system: $50 each.

(9) Tank installation:

(a) Up to 550 gallons: $100 each.

(b) Over 550 gallons: $200 each.

(c) Incinerators: $500 each.

(d) Crematoriums: $500 each.

(e) Alarm panel: $75 each.

(f) Fire pumps: $200 each.

(g) Preaction valves: $50 each.

(h) Dry pipe/alarm valve: $50 each.

(i) Smoke control systems: $65 each.

(10) Incinerators: $500 each.

(11) Crematoriums: $500 each.

(12) Installation of factory-built chimneys and chimney liners shall be $25 each.

(13) The minimum fee for fire permits shall be $75.

(14) Independent preengineered systems: $150 for each system.

(15) Gas- or oil-fired appliances: $25 for each appliance.

(16) kitchen exhaust systems (residential): $50 each.

F. Plumbing fees.

(1) Fixtures and appliances connected to or components of a plumbing system: $25 per fixture/appliance.

(2) Waste/vent stacks: $25 each.

(3) Special devices, including, but not limited to, grease traps, separators, interceptors, air-conditioning units, refrigeration units, sewer connections, gas-fired appliances, water service connections, backflow preventer, sewer pumps and fuel oil piping, pool drains, generators, well connections, septic connections, pool heaters, steam units, water conditioners: $75 each.

(4) Direct replacement HVAC equipment: $75 each for the first two, $25 per piece after the first two.

(5) Steam/hot-water boilers: $75 each.

(6) Gas piping service: $75 per system.

(7) Appliances added to a gas piping system: $25 per appliance.

(8) Water heaters:

(a) Conventional type: $75 each.

(b) Tankless water heater: $75 each.

(c) Boiler type add-on: $25.

(9) Installation of liquefied petroleum containers: $100 for each container.

(10) Fuel oil tanks installation:

(a) Up to 1,000 gallons: $150;

(b) Over 1,000 gallons: $250.

(11) Removal of AST or UST: $200.

(12) The minimum fee for plumbing permits shall be $75.

G. Construction permit surcharge fee. In order to provide for the training, certification and technical support programs required by the Uniform Construction Code Act,[1] an enforcing agency shall collect a surcharge fee, to be based upon the volume of new construction or estimated cost of alteration/renovation, in accordance with N.J.A.C. 5:23-4.19(b).

H. State of New Jersey permit fees. The fees shall be computed in accordance with N.J.A.C. 5:23-2.28 except pre-engineered systems of commercial farm buildings. No fee shall be collected for pre-engineered systems of commercial farm buildings.

I. Certificate of occupancy.

(1) New construction/additions/tenant fit up/reconstruction: 10% of total construction permit fee.

(2) Change in use: $100.

(3) Continuation of use under N.J.A.C. 5:23-2.23(c): $125.

(4) Variation:

(a) Submission: $75.

(b) Resubmission: $50 each.

(5) Temporary certificate of occupancy extension: $35.

J. Mechanical subcode fees.

(1) Heating equipment: $75 per system.

(2) Cooling equipment: $75 per system.

(3) After two units: $25 per unit thereafter.

(4) Generator/water heater/pool heater: $75 per unit.

(5) LPG tank install and/or removal: $150 per unit.

(6) Oil tank UST removal: $150 per unit.

(7) Oil tank AST removal: $150 per unit.

(8) Fuel tanks 1,000 gallons and higher: $300 per unit; install and removal above 1,000 gallons: $500.

(9) Gas piping: $100 per system.

(10) Gas type appliances: $25 per unit.

(11) Gas fireplace or like equipment: $75 per unit.

(12) Hydronic piping, pumps, etc.: $75 per system.

(13) Duct work, new/replace: $100.

(14) Chimney/vent, new/replace: $100 per unit.

(15) Split units: $75, plus $25 per head unit.

K. Annual review of fee schedules. The construction official shall, with the advice of the subcode officials, prepare and submit to the Township Committee, annually, a report recommending a fee schedule based on the operating expenses of the agency and other expenses of the municipality attributable to the enforcement of the State Uniform Construction Code Act and subcodes.

SECTION 2. All ordinances or parts of ordinances which are inconsistent with the provisions of this ordinance are, to the extent of such inconsistency, hereby repealed. All portions of the ordinance not modified herein remain in full force and effect.

SECTION 3. Should any section, clause, sentence, phrase or provision of this ordinance be declared unconstitutional or otherwise invalid by a court of competent jurisdiction, such decision shall not affect the remaining portions of this ordinance.

SECTION 4. This ordinance shall take effect upon final passage, adoption and publication in the manner prescribed by law.

The foregoing Ordinance was introduced and passed on the first reading at the meeting of the Township Committee of Colts Neck Township on September 30, 2026 and duly adopted by the Township Committee of Colts Neck Township after public hearing on October 14, 2026.

_____

Kathleen Capristo, Municipal Clerk

RECORD OF VOTE										
	First Reading					Second Reading				
	September 30, 2026					October 14, 2026				
	M	S	Yes	No	NV	Ab	M	S	Yes	No	NV	Ab
Mayor Viola			X									
Deputy Mayor Buzzetta			X									
Rizzuto	S		X									
Torchia Buss	M		X									
Tobia			X									

M - Moved S - Seconded X - indicates vote NV - Not Voting Ab - Absent

ORDINANCE 2026-21

AN ORDINANCE OF COLTS NECK TOWNSHIP IN THE COUNTY OF MONMOUTH AND THE STATE OF NEW JERSEY AMENDING AND SUPPLEMENTING CHAPTER 102, "DEVELOPMENT REGULATIONS," OF THE CODE OF THE TOWNSHIP OF COLTS NECK

WHEREAS, the Colts Neck Township Committee is aware of facilities that are commonly known as "data centers," and sometimes referred to "internet data centers" or "cloud data centers," that are utilized to house computer systems and associated components such as telecommunication and data storage systems, redundant or "backup" components, infrastructure for power supply, data communication connections, environmental and safety controls for building climate, equipment cooling, and fire suppression, and security devices, systems, and installations, for the purpose of aggregating collective computing demands for cloud services, video streaming, blockchain and crypto mining, artificial intelligence and machine learning, virtual reality, and other data maintenance and transmission purposes; and

WHEREAS, the Colts Neck Township Committee is aware of growing public concerns about data centers and their potential environmental and socioeconomic impacts, including but not limited to high electricity and water consumption that can result in electrical grid overload and outages, increased consumer energy prices, and aquifer depletion; heat generation; interference with cellular and wireless communications; and disturbing, disruptive ambient noise; and

WHEREAS, neither data centers as described above, nor any similar types of functionally equivalent but differently-named facilities, have been recommended or otherwise designated as permitted or conditionally-permitted uses or structures in the Colts Neck Township Master Plan; nor are data centers or similar facilities listed as permitted or conditionally-permitted uses or structures in any of Colts Neck Township's zoning districts; nor are data centers or similar facilities included within any current category or classification of permitted or conditionally-permitted uses or structures in any of Colts Neck Township's zoning districts; and

WHEREAS, for the foregoing reasons "data centers" as described above are not and have never been permitted or conditionally-permitted by right in any Colts Neck Township zoning district; and

WHEREAS, Section 102-22 of Colts Neck Township Code, Chapter 102 "Development Regulations" Subsection 22 "Prohibited Uses" provides that all uses not expressly permitted by this chapter are prohibited, and

WHEREAS, given the growing public concern about data centers and their potentially detrimental environmental and socioeconomic impacts, and public nuisance and the need to learn more about them before determining whether or subject to what conditions they might be permitted in any of Colts Neck Township's zoning districts, the Colts Neck Township Committee has deemed it necessary and appropriate to state clearly in the Colts Neck Township Code that data centers are, and shall continue to be, prohibited uses/structures in all of Colts Neck Township's zoning districts unless and until they can be recommended in Colts Neck Township's Master Plan, and appropriately designated as permitted or conditionally-permitted uses/structures in any one or more of Colts Neck Township's zoning districts; and

NOW, THEREFORE, BE IT ORDAINED, by the Township Committee of the Township of Colts Neck, in the County of Monmouth, State of New Jersey, as follows: (additions to text indicated by underline; deletions to text indicated by ~~strikeout~~).

SECTION I That Chapter 102 "Development Regulations" Article IV "Terminology" Subsection 4 "Definitions" is hereby amended to include the following new definition:

DATA CENTERS
A facility used primarily for the storage, management, processing, and analysis of digital and electric data that houses computer and network systems and includes associated components such as telecommunication and data storage systems; redundant or "backup" power and data storage components; electrical transformers, substations, and other power supply infrastructure; data communication connections; environmental and safety controls for building climate, equipment cooling, and fire suppression; and security devices,

systems, and installations, to serve as off-site or remote accessory facilities available and accessible to users via telecommunication or internet utilities for the purpose of aggregating collective computing demands for cloud services, video streaming, blockchain and crypto mining, artificial intelligence and machine learning, including the training, development, testing, and deployment of artificial intelligence and machine-learning models, virtual reality, and other internet, telecommunication, computing, artificial intelligence, data storage, maintenance, processing, analysis, and transmission purposes. Such facilities may include high-performance computing systems, specialized processors, and other computing infrastructure designed or utilized for artificial intelligence, machine learning, and other computationally intensive applications. Sometimes referred to as "internet data centers" or "cloud data centers" (and any and all functionally equivalent but differently named uses, structures and facilities).

SECTION II That Chapter 102 "Development Regulations" Article VIII "Zoning Requirements" Subsection 84B "Principal permitted uses on land and buildings" be amended and supplemented in the following parts only:

11. Data Centers, sometimes referred to as internet data centers or cloud data centers, shall be prohibited.

SECTION III That Chapter 102 "Development Regulations" Article VIII "Zoning Requirements", Subsection 85B "Principal permitted uses on land and in buildings" be amended and supplemented in the following parts only:

7. Data Centers, sometimes referred to as internet data centers or cloud data centers, shall be prohibited.

SECTION IV That Chapter 102 "Development Regulations" Article VIII "Zoning Requirements", Subsection 85.2B "Principal permitted uses on land and in buildings" be amended and supplemented in the following parts only:

5. Data Centers, sometimes referred to as internet data centers or cloud data centers, shall be prohibited.

SECTION V That Chapter 102 "Development Regulations" Article VIII "Zoning Requirements", Subsection 85.3B "Principal permitted uses" be amended and supplemented in the following parts only:

5. Data Centers, sometimes referred to as internet data centers or cloud data centers, shall be prohibited.

SECTION VI That Chapter 102 "Development Regulations" Article VIII "Zoning Requirements", Subsection 86B "Principal permitted uses on land and buildings" be amended and supplemented in the following parts only:

10. Data Centers, sometimes referred to as internet data centers or cloud data centers, shall be prohibited.

SECTION VII That Chapter 102 "Development Regulations" Article X "Zoning Requirements" Subsection 109B "Principal permitted uses on land and in buildings" be amended and supplemented in the following parts only:

17. Data Centers, sometimes referred to as internet data centers or cloud data centers, shall be prohibited.

SECTION VIII That Chapter 102 "Development Regulations" Article X "Zoning Requirements" Subsection 111B "Permitted principal uses" be amended and supplemented in the following parts only:

4. Data Centers, sometimes referred to as internet data centers or cloud data centers, shall be prohibited.

SECTION IX That Chapter 102 "Development Regulations" Article X "Zoning Requirements" Subsection 112B "Principal permitted uses on the land and in buildings" be amended and supplemented in the following parts only:

14. Data Centers, sometimes referred to as internet data centers or cloud data centers, shall be prohibited.

SECTION X That Chapter 102 "Development Regulations" Article X "Zoning Requirements" Subsection 112.1B "Principal permitted uses on land and in buildings" be amended and supplemented in the following parts only:

9. Data Centers, sometimes referred to as internet data centers or cloud data centers, shall be prohibited.

SECTION XI: Severability.

If any section, paragraph subsection, clause or provision of this ordinance shall be adjudged invalid, such adjudication shall apply only to the section, paragraph, subsection, clause or provision so adjudged and the remainer of this ordinance shall be deemed valid and effective.

SECTION XII: Repealer.

The remainder of all other sections and subsections of the aforementioned ordinance not specifically amended by this ordinance shall remain in full force and effect.

SECTION XIII: Inconsistent Ordinance.

All ordinances or parts thereof inconsistent with the provisions of this ordinance are hereby repealed as to such inconsistency.

SECTION XIV: This ordinance shall take effect immediately upon passage, publication and filing according to law.

The foregoing Ordinance was introduced and passed on the first reading at the meeting of the Township Committee of Colts Neck Township on September 30, 2026 and duly adopted by the Township Committee of Colts Neck Township after public hearing on October 14, 2026.

_____

Kathleen Capristo, Municipal Clerk

RECORD OF VOTE										
	First Reading					Second Reading				
	September 30, 2026					October 14, 2026				
	M	S	Yes	No	NV	Ab	M	S	Yes	No	NV	Ab
Mayor Viola			X									
Deputy Mayor Buzzetta		S	X									
Rizzuto		M	X									
Torchia Buss			X									
Tobia			X									

M - Moved S - Seconded X - indicates vote NV - Not Voting Ab - Absent

ORDINANCE 2026-22

AN ORDINANCE OF COLTS NECK TOWNSHIP IN THE COUNTY OF MONMOUTH AND THE STATE OF NEW JERSEY AMENDING AND SUPPLEMENTING THE CODE OF THE TOWNSHIP OF COLTS NECK

WHEREAS, the Colts Neck Township adopted Ordinance No. 2019-18 establishing rules and regulations governing Temporary Mobile Retail Food Establishments (Food Trucks) on September 9, 2019, and

WHEREAS, Colts Neck has now administrated and enforced Temporary Mobile Retail Food Establishments for approximately six years and has gained substantial operating experience; and

WHEREAS, during this six-year period, Colts Neck has determined that the existing limitation permitting only one (1) food truck at a time has unnecessarily restricted opportunities for local businesses, reduced consumer choice, and limited the effectiveness of food truck events and commercial activity within designated areas; and

WHEREAS, Colts Neck has further determined that allowing up to four (4) food trucks to operate simultaneously in approved locations can be accomplished without adverse impacts to traffic circulation, parking availability, pedestrian safety, or adjacent properties when subject to the operational standards and conditions set forth in the ordinance; and

WHEREAS, the current ordinance permits Temporary Mobile Retail Food Establishment operations for periods of up to 90 days without renewal or additional inspections; and

WHEREAS, the 90-day permit duration is excessively long and may allow changes to occur to Temporary Mobile Retail Food Establishments equipment, operations, safety systems or sanitary conditions without timely municipal oversight; and

WHEREAS, the Township Committee has determined that increasing the number of food trucks from one to four and decreasing the duration of the permit from 90 days to 30 days are consistent with the Township's goals of encouraging responsible economic development while maintaining appropriate safeguards for public health, safety and welfare of the general public.

NOW, THEREFORE, BE IT ORDAINED by the Township Committee of the Township of Colts Neck, County of Monmouth, State of New Jersey as follows: (additions to text indicated by underline; deletions to text indicated by ~~strikeout~~).

SECTION I: That Chapter 29, Fire Prevention Bureau, subsection 7, Registration, inspections, permits and fees be amended and supplemented in the following parks only.

§29-7C(11) Temporary mobile retail food establishments.

The Fire Marshal may inspect temporary mobile retail food establishments at any time during the duration of the fire safety permit or ~~ninety-day~~ thirty-day extended fire safety permit. The application for a ~~ninety-day~~ thirty-day extended permit must clearly state the specific dates and locations the temporary mobile retail food establishment will be operating. The ~~ninety-day~~ thirty-day extended fire safety permit shall be attached to a specific vehicle or temporary mobile retail food establishment. Vendors with multiple vehicles shall obtain separate ~~ninety-day~~ thirty-day fire safety permits for each vehicle used. The fee for a temporary mobile retail food establishment fire safety permit shall be as follows:

a) One-day permit: $54.
b) ~~Ninety-day~~ Thirty-day extended permit: $~~400~~150.

SECTION II: That Chapter 124 Food Establishments of the Code of the Township of Colts Neck be amended and supplemented in the following parts only.

§ 124-3 Application information and fee.

A. The temporary mobile retail food establishment license shall be valid for a maximum of ~~90~~ 30 days.

B. At the time of filing the application, a fee of ~~$100~~ $250 shall be paid to the Municipal Clerk to cover the cost of investigation of the facts stated therein.

§ 124-4 Temporary mobile retail food establishment rules and regulations.

Property owners may invite a temporary mobile retail food establishments on their premise subject to the following rules and regulations.

B. Property owners may invite a maximum of four temporary mobile retail food establishments on site for a total of no more than three times per calendar week per mobile retail food establishment.

C. A temporary mobile retail food establishment shall not be invited for longer than eight hours per day and at all other times must remove from the parcel all materials associated with the business.

D. No temporary mobile retail food establishment shall operate before 7:00 a.m. or after 10:00 p.m. This period does not include setup or breakdown operations.

E. Temporary mobile retail food establishments shall not operate within 200 linear feet of a brick-and-mortar retail food establishment building.

F. Temporary mobile retail food establishments in the B-1 Business Zone shall not operate within 500 linear feet of a residential zone boundary.

G. Temporary mobile retail food establishments shall maintain a twenty-foot separation from any building on-site.

§ 124-5 Exemption

The following activities shall be exempted from this chapter and obtaining a Temporary Mobile Retail Food license from the Township Clerk, but may require a retail food establishment license and fire safety permit:

E. Temporary Mobile retail food establishments associated with a Township approved event on Township parkland or other Township property.

SECTION III: That Chapter 243, Food Establishments, Subsection 6 be amended and supplemented in the following parts only

§ 243- 6D A temporary retail food operator(s) license (in accordance with N.J.A.C. 8:24) shall be valid for a maximum period of 14 consecutive days. The fee for a fourteen-day temporary retail food operator(s) license shall be $60. An extended temporary retail food operator(s) license shall be valid for a maximum of ~~90~~30 consecutive days. The fee for a thirty-day extended temporary retail food operator(s) license shall be ~~$300~~ 150.

SECTION IV: Severability.

If any section, paragraph subsection, clause or provision of this ordinance shall be adjudged invalid, such adjudication shall apply only to the section, paragraph, subsection, clause or provision so adjudged and the remainer of this ordinance shall be deemed valid and effective.

SECTION V: Repealer.

The remainder of all other sections and subsections of the aforementioned ordinance not specifically amended by this ordinance shall remain in full force and effect.

SECTION VI: Inconsistent Ordinance.

All ordinances or parts thereof inconsistent with the provisions of this ordinance are hereby repealed as to such inconsistency.

SECTION VII: This ordinance shall take effect immediately upon passage, publication and filing according to law.

The foregoing Ordinance was introduced and passed on the first reading at the meeting of the Township Committee of Colts Neck Township on September 30, 2026 and duly adopted by the Township Committee of Colts Neck Township after public hearing on October 14, 2026.

_____

Kathleen Capristo, Municipal Clerk

RECORD OF VOTE										
	First Reading					Second Reading				
	September 30, 2026					October 14, 2026				
	M	S	Yes	No	NV	Ab	M	S	Yes	No	NV	Ab
Mayor Viola			X									
Deputy Mayor Buzzetta		S	X									
Rizzuto			X									
Torchia Buss	M		X									
Tobia			X									

M - Moved S - Seconded X - indicates vote NV - Not Voting Ab - Absent

ORDINANCE #2026-18

AN ORDINANCE AMENDING AND SUPPLEMENTING CHAPTER 102, "DEVELOPMENT REGULATIONS" OF THE CODE OF THE TOWNSHIP OF COLTS NECK, ARTICLE VIII, "ZONING REQUIREMENTS," "PART 4. ZONING AND DESIGN REQUIREMENTS FOR RESIDENTIAL DISTRICTS," SECTION 102-85.4, "A-10 OVERLAY RESIDENTIAL DISTRICT" UNDER PROTEST

Block 11, Lot 3.02 (151 Dutch Lane Road)

WHEREAS, on March 20, 2024, Governor Murphy signed P.L.2024, c.2 into law, establishing a new framework for determining and enforcing municipalities' affordable housing obligations under the New Jersey Supreme Court's Mount Laurel doctrine and the New Jersey Fair Housing Act (the "FHA") (N.J.S.A. 52:27D-301 et al.); and

WHEREAS, the Amended FHA requires the Department of Community Affairs ("DCA") to calculate the Fourth Round Present and Prospective Need Obligation of municipalities within the state and establishing the New Jersey Affordable Housing Dispute Resolution Program; and

WHEREAS, pursuant to the FHA, Administrative Directive No. 14-24, and Resolution No. 2025-43, the Township filed a Declaratory Judgment Action under Docket Number MON-L-422-25 seeking approval and confirmation by the Affordable Housing Alternative Dispute Resolution Program (the "Program") of its affordable housing obligations;

WHEREAS, on March 27, 2025, the Hon. Linda Grasso Jones, J.S.C. issued an order finding in favor of the Township's identified affordable housing obligation and authorizing the Township to proceed with preparation and adoption of a Fourth Round Housing Element and Fair Share Plan by June 30, 2025;

WHEREAS, the Township's Planning Board adopted the Fourth Round Housing Element and Fair Share Plan ("Fourth Round HEFSP") on June 9, 2025, which was endorsed by the Township Committee on June 11, 2025; and

WHEREAS, the Township submitted the Fourth Round HEFSP to the Program in accordance with the FHA and Directive #14-24; and

WHEREAS, on August 28, 2025 and September 2, 2025, Fair Share Housing Center, Active Acquisitions, LLC and 68 Obre Owner LLC filed challenges to the Fourth Round HEFSP; and

WHEREAS, on March 4, 2026, the Program issued its Decision Recommendation Housing Element and Fair Share Plan: Denial of Certification of Compliance Pending Action by Township ("Program Decision Recommendation") whereby it found that the Fourth Round HEFSP does not comply with the FHA and the Mount Laurel Doctrine and ordered that to maintain immunity and receive a Certification of Compliance the Township must adopt an Amended HEFSP designating the properties located at 68 Obre Road (Block 50, Lot 7), 318-22 Route 537 (Block 48, Lots 25.01, 26 & 27), and 151 Dutch Lane (Block 11, Lot 3.02) for inclusionary zoning by April 8, 2026 and adopt enabling zoning ordinances to permit development of the three (3) projects proposed by 68 Obre Owner LLC and Active Acquisitions, LLC by May 13, 2026; and

WHEREAS, on March 9, 2026, the Hon. Linda Grasso Jones, J.S.C. entered an Order accepting the Program Decision Recommendation and ordering the Township to adopt an Amended HEFSP by April 8, 2026 and the enabling zoning ordinances by May 13, 2026 ("March 9 Order"); and

WHEREAS, in accordance with the March 9 Order, Colts Neck Township Planning Board, under protest, adopted on April 7, 2026 an Amendment to the Fourth Round HEFSP in compliance with the March 9 Order and as meeting the requirements of N.J.S.A. 40:55D-28 and N.J.S.A. 52:27D-310, which was endorsed, under protest, by the Township Council on April 8, 2026; and

WHEREAS, on June 23, 2026, the Hon. Linda Grasso Jones, J.S.C. entered an order (the "June 23 Order") providing as follows in relevant part:

It is anticipated that issues involving the 68 Obre Owner, LLC site will be resolved prior to the August 12, 2026 Township Committee meeting, and resolution of issue(s) involving development by 68 Obre Owner will be addressed with adoption of a resolution by the governing body at that meeting.

The Township and Active Acquisitions, LLC will continue their discussions regarding the potential for development by Active Acquisitions within Colts Neck.

Immunity from Round IV builder's remedies suits continues to be extended to Colts Neck through September 17, 2026

; and

WHEREAS, in light of the foregoing, and to comply with the March 9 Order consistent with the terms of the June 23 Order, the Township Committee seeks to rezone the property located at Block 11, Lot 3.02 (151 Dutch Lane Road) to permit the development of the inclusionary project proposed by Active Acquisitions LLC; and

WHEREAS, the Township adopts this re-zoning ordinance for Block 11, Lot 3.02 (151 Dutch Lane Road) under protest as directed by the March 9 Order and with the intent to appeal the Program Decision Recommendation and the March 9 Order once the matter is deemed final for appellate purposes and it reserves all rights and positions in connection with any appeal, and based upon the same, any applicant intending to pursue land use approvals in conjunction with this rezoning shall be on notice that the submission of such an application or the granting of any land use approvals prior to a final non-appealable adjudication of an appeal of the Program Decision Recommendation and the March 9 Order shall be contingent upon resolution of such appellate practice.

NOW, THEREFORE, BE IT ORDAINED, by the Township Committee of Colts Neck Township, Monmouth County, New Jersey, that the Code of the Township of Colts Neck is hereby amended, under protest, as follows:

SECTION 1. Chapter 102, "Development Regulations," Article VIII, "Zoning Requirements," Section 102-85.4 "A-10 Overlay Residential District," shall be amended and supplemented as follows:

Section 102-85.4(C) – A-10 Overlay Residential District

A. Under protest, the Township adopts this re-zoning ordinance for Block 11, Lot 3.02 (151 Dutch Lane Road) as directed by the March 9 Order. The Township is rezoning the site as directed by the Program Decision Recommendation and March 9 Order. The Township reserves the right, and expresses its intent, to exercise an appeal from these orders once the matter is deemed final, pursuant to its statutory right under N.J.S.A. 52:27D-304.1 and in turn Administrative Directive #14-24. Any land use approvals sought pursuant to this Ordinance prior to the exhaustion of appellate practice shall be made contingent upon a final non-appealable adjudication.

B. Purpose. The purpose of the A-10 Residential District is to create the opportunity for the development of an inclusionary affordable housing project in accordance with the March 9 Order. It is the intent of this ordinance to permit an inclusionary residential development of up to 389 dwelling units provided that 20 percent of the units are set-aside, affordable to and occupied by, very-low, low and moderate income households.

C. Principal permitted uses on land and in buildings. The following shall be permitted as principal uses:

(1) Townhouses.

(2) Stacked townhouses containing not more than 3 dwellings each.

(3) Agricultural uses.

(4) Conservation areas and open space.

(5) Multiple principal uses and principal buildings shall be permitted on the tract.

A. Accessory uses. The following shall be permitted as accessory uses (subject to §§ 102-48 and 102-87, except as stated herein.):

(1) Off-street parking facilities and parking lots.

(2) Mailboxes, lampposts, flagpoles, driveways, paths, sidewalks.

(3) Common facilities and amenities including: tot lots, clubhouse with a fitness center and reception facilities, swimming pools, hot tubs, grilling stations and other on-site recreational areas and facilities, common walkways, gazebos, sitting areas, picnic areas and gardens, and other similar uses.

(4) Patios, decks, terraces, and balconies.

(5) Fences and walls. See §102-57 and §102-73 for requirements.

(6) Satellite dishes and solar energy panels. Ground mounted solar energy panels shall be screened from view of public streets and neighboring properties by screening, planting, fencing or a combination of these techniques, in order to provide proper screening after 2 growing seasons. Roof mounted solar energy panels shall be mounted flush, or nearly flush, with building sides or roofs.

(7) Bike racks

(8) Signs.

(9) Emergency generators.

(10) Utility structures, including but not limited to, stormwater management basins and facilities, pump stations, on-site waste treatment facilities, wells, junction boxes, and the like. Existing stormwater management basins and facilities may be utilized in new development.

(11) Maintenance building and pump station maintenance building, not to exceed 1,500 square feet of coverage each and 25 feet in height.

(12) Temporary construction and sales trailers. See §102-80 for requirements.

(13) Other uses which are customarily incidental to a permitted principal use.

A. Housing types.

(1) Residences may be family housing and/or restricted as senior housing to those 55 years or older.

(2) Not more than 80% of the total dwellings may be stacked townhouses.

(3) Stacked townhouses shall not be located along a tract boundary shared with an off-tract single-family home. This requirement shall not apply to off-tract single-family homes located across a public street or to stacked townhouses located 300 feet or more from the tract boundary.

B. Tract Area. The term "tract", as applied to the A-10 Overlay Residential District shall be defined as the entirety of the property in the A-10 Overlay Residential District.

C. Affordable housing.

(1) In accordance with the Fair Housing Act, and the Uniform Housing Affordability Controls ("UHAC", N.J.A.C. 5:80-26.1), and the Township's affordable housing regulations (§102-97.1), 20% of all residential dwelling units built within this district shall be set aside for very-low, low, and moderate income households. Should there be any conflict between the Township ordinance and UHAC, the UHAC standard shall apply.

(2) At least half of the affordable units shall be affordable to very low and low income households; and the remaining affordable units shall be affordable to moderate income households. The very low income units shall equal at least 13% of the total

affordable units. A typical percentage of affordable housing shall be 13% very low, 37% low and 50% moderate income units.

(3) Each rental affordable dwelling unit shall be deed restricted for at least 40 years from the date of initial occupancy of the unit, as set forth in UHAC (N.J.A.C. 5:8-26.12.). Each for-sale affordable unit shall be deed-restricted for at least 30 years from the date of initial occupancy of the unit, as set forth in UHAC (N.J.A.C. 5:8-26.6.).

A. Bulk, area, and building requirements.

Requirements	**Standard**
Minimum tract area	30 acres
Minimum tract frontage	1,100 feet
Maximum dwelling units	389
Minimum width of townhouse or stacked townhouse	20 feet
Minimum setbacks	
Principal building	
Setback from Dutch Lane Road	100 feet
Setback from other tract boundaries	75 feet
Setback from internal roads	20 feet
Setback from parking (excluding driveway spaces)	10 feet
Minimum distance between principal buildings	
Side to side	15 feet
Side to rear	30 feet
Rear to rear	30 feet
Maximum dwellings per building	
Townhouses	8
Stacked townhouses	18
Maximum building height	
Townhouses	3 stories / 45 feet
Stacked townhouses	3 stories / 45 feet
Clubhouse	1 story / 30 feet
Accessory buildings, excluding clubhouse	1 story / 20 feet
Maximum lot coverage (coverage of tract)	60%

B. Building height.

(1) The term "building height" shall be defined as follows: The vertical distance measured to the highest point of a building from the average finished grade,

measured at five-foot intervals along and five feet away from the foundation along the side(s) of the building facing a street.

C. Minimum open space. A minimum of 30% of the tract shall be open space, defined for this purpose as lands consisting of common open space, undevelopable environmentally constrained areas (wetlands and associated buffers, etc.), tract buffers, stormwater facilities, and park areas.

D. Maintenance buildings. Maintenance buildings may be subdivided from the tract with a maximum lot size of 6,000 s.f. The building design shall be complementary to the surrounding on-tract buildings.

E. Accessory buildings and structures.

(1) Accessory buildings and structures, attached or detached from the principal building, are not permitted in the tract setbacks. This shall not apply to utility structures, site entrance, stormwater management and drainage facilities, or permitted project identification signs.

(2) Accessory buildings or structures as part of principal buildings. Any accessory buildings or structures attached to a principal building or structure shall, for purposes of determining yard requirements only, be considered part of the principal building, and the total structure shall adhere to the yard requirements for the principal building regardless of the technique of connecting the principal and accessory buildings or structures. The above shall also apply to a ground-level patio surfaces adjacent to a building.

(3) Accessory buildings and structures detached from principal buildings, excluding fences, walls, mailboxes, light fixtures or similar structures.

(a) Structures for private residential use (sheds, private pools, etc.) shall not be located in the front yard and shall have a minimum side and rear yard setback of 5 feet.

(b) Minimum setback from roads: 20 feet.

(c) Minimum setback to parking: 10 feet.

F. Tract setback requirements.

(1) Buildings and structures shall not be located within tract setbacks, with the exception of site access, permitted project identification signs, utility structures and stormwater management and drainage facilities.

G. Site access, off-street parking, and loading requirements.

(1) A maximum of 1 site access point each shall be permitted from Dutch Lane Road and Boundary Road. Driveways serving individual buildings, townhouses or stacked townhouses are prohibited from Dutch Lane Road and Boundary Road.

(2) A minimum of 20 feet shall be provided for any private driveway depth, measured from the garage to the sidewalk or cartway, as may be applicable.

(3) The number of parking spaces and roadway standards shall be consistent with the requirements of N.J.A.C. 5:21-1.1 et seq., known as the Residential Site Improvements Standards ("RSIS").

(4) The number of parking spaces required for a club house or amenity space shall be 1 parking space per 500 square feet of gross floor area.

(5) No loading spaces are required.

H. Landscape and fencing requirements.

(1) Landscaping and plantings shall be provided pursuant to §102-71., except as stated herein.

(2) Shade trees shall be planted with average spacing of one tree every 55 feet along all public and private streets. Shade trees shall be a maximum of 15 feet from the curbline.

(3) To enhance privacy and screening, a row of trees, consisting of evergreen, shade and ornamental trees, shall be planted along the rear yard of any residential

building, excluding those whose rear yard directly abuts a tract boundary. The trees shall be planted with average spacing of one tree every 30 feet and may be clustered.

(4) Landscape buffers.

(a) A 50 foot landscaped buffer shall be provided along the Dutch Lane Road and Boundary Road frontages. and horizontal variation is encouraged within the landscape buffer. A planted berm of 5 to 7 feet in height shall be provided within the landscape buffer and/or tract boundary. A planted berm shall not be required where the distance of the road to a building in the district exceeds 300 feet. The berm shall have gently curving, naturalistic forms with vertical and horizontal variation. Berm slopes shall not exceed 3:1, with an average slope of between 4:1 and 5:1. The berm shall include a variety of plant materials with a predominance of evergreen trees planted generally along the ridge to maximize the buffer screening. Existing vegetation may satisfy all or a portion of this requirement where it provides a suitable screen. Existing vegetation may satisfy all or a portion of this requirement where it provides a suitable screen. A berm may utilize a retaining wall, provided the retaining wall does not face an existing street or off tract residence, and shall not exceed 75% of the berm height for which it is associated.

(b) A 40 foot landscaped buffer shall be provided along the side and rear tract boundaries. A planted berm of 4 to 6 feet in height shall be provided within the landscape buffer and/or tract boundary. A planted berm shall not be required where the distance of the applicable tract boundary to a building in the district exceeds 300 feet. The berm shall have gently curving, naturalistic forms with vertical and horizontal variation. Berm slopes shall not exceed 3:1, with an average slope of between 4:1 and 5:1. The berm shall include a variety of plant materials with a predominance of evergreen trees planted generally along the ridge to maximize the buffer screening. Existing vegetation may satisfy all or a portion of this requirement where it provides a suitable screen. A berm may utilize a retaining wall, provided the retaining wall does not face an existing street or off tract residence, and shall not exceed 75% of the berm height for which it is associated.

(c) The landscaped buffers shall meet the standards set forth in§102-90 except as stated herein. No structures are permitted within the buffer with the exception of site entrances and permitted project identification signs. Up to 10% of each required buffer may be occupied by stormwater management and drainage facilities.

(5) Fences.

(a) Fences shall be provided as per §102-73, except as stated herein.

(b) Fences within tract setbacks shall have a maximum height of 4 feet.

(c) Fences within side and rear yards shall have a maximum height of 6 feet.

(d) Fences within the front yard, or between a property line and the principal building, shall have a maximum height of 4 feet.

I. Lighting requirements.

(1) Section 102-117 shall not apply.

(2) Light fixtures shall have a maximum mounting height of 20 feet.

(3) All lighting shall be shielded to minimize any glare, spillage, or light pollution.

(4) The maximum level of illumination measured at any tract boundary line shall be 0.1 foot candles, except for any ingress or egress driveways, where additional lighting for safety shall be permitted.

(5) All lighting shall be dark sky compliant.

(6) All lighting shall be LED with a maximum color temperature of 3,000 K.

J. Signs.

(1) Except as provided for herein, all signs shall be in accordance with the requirements of § 102-106.

(2) One monument or freestanding project identification sign at each site entrance is permitted in accordance with the following standards:

(a) Signs shall be non-illuminated or externally illuminated.

(b) Signs shall be landscaped and may identify the community project name, developer, and logo.

(c) The maximum sign area containing text and logos shall not exceed 40 square feet for each side of the sign if two-sided.

(d) The maximum sign height, including the structure and sign area, shall not exceed 6 feet.

(e) The minimum sign setbacks shall be 10 feet from the public right-of-way.

(3) Ground mounted wayfinding signs shall be permitted to identify specific locations and/or buildings, areas, or recreational facilities. No sign shall exceed 4 square feet in area and 4.5 feet in height.

(4) Seasonal decorations are permitted in accordance with the requirements of § 102-106C.

K. Ordinance Exceptions.

(1) The inclusionary development shall be exempt from the following sections of the Township code: Section 102-98 (Multifamily Provisions); Section 102-63 (Natural Features); Sections 102-71(C-E) Shade Trees, Wooded Areas and Landscaping; Sections 102-77 (Streets); Section 102-83 (Yards); Section 102-88 (Bikeways); Section 102-94 (Design Standards in Stream Corridors); and Section 102-105 (Slope Regulations).

(2) The inclusionary development shall also be exempt from Section 102-80.1(A-F) (Tree Replacement). The inclusionary development shall be permitted to remove trees, provided that the developer replaces trees with a DBH of 10 inches or more with 2 replacement trees with a DBH of at least 3 inches. Replacement trees required by this section shall be in addition to any other landscaping required in this zone.

(3) Soil Erosion and Sedimentation Control review shall be based on the conclusions of the Freehold Soil Conservation District rather than Section 102-75 of the Colts Neck Ordinance. The review of streets shall be governed by the New Jersey Residential Site Improvement Standards (RSIS), rather than the Colts Neck Ordinance.

L. Conflicts.

(1) To the extent there is a conflict between this ordinance and any other section of the Township's ordinances, this ordinance shall apply. To the extent there is a conflict between this and any other Township ordinances and the New Jersey Uniform Housing Affordability Controls standards (UHAC), the UHAC standards shall apply, subject to any order of the court.

(2) To the extent there is a conflict between this ordinance or any other section of the Township's ordinances and RSIS, RSIS standards shall apply.

SECTION 2. Remainder. Except as hereby amended and supplemented, all other parts of Chapter 102 of the Code of the Township of Colts Neck shall remain in full force and effect.

SECTION 3. Referral to Planning Board. Upon introduction, this Ordinance shall be referred to the Planning Board of the Township of Colts Neck for its review and comment.

SECTION 4. Repealer. All ordinances or parts of ordinances inconsistent or in conflict with this Ordinance are hereby repealed as to said inconsistencies and conflict.

SECTION 5. Severability. If any Section, part of any Section or clause or phrase of this Ordinance is for any reason held to be invalid or unconstitutional, such decision shall not affect the remaining provisions of this Ordinance. The Township Committee of the Township of Colts Neck declares that it would have passed the Ordinance and each Section thereof, irrespective of the fact that any one or more of the subsections, sentences, clauses or phrases may be declared unconstitutional or invalid.

SECTION 6. Effective Date. This Ordinance shall take effect immediately upon final passage and publication according to law.

The foregoing Ordinance was introduced and passed on the first reading at the meeting of the Township Committee of Colts Neck Township on the October 14, 2026 and will be considered for final passage and adoption on October 28, 2026, 6:30 p.m. Town Hall, 1 Veterans Way at which time and place a public hearing will be held for all persons desiring to be heard thereon will be given full opportunity.

_____
Kathleen Capristo, Municipal Clerk

RECORD OF VOTE										
	First Reading					Second Reading				
	October 14, 2026					October 28, 2026				
	M	S	Yes	No	NV	Ab	M	S	Yes	No	NV	Ab
Mayor Viola												
Deputy Mayor Buzzetta												
Rizzuto												
Torchia Buss												
Tobia												
M - Moved S - Seconded X - indicates vote NV - Not Voting Ab - Absent												

ORDINANCE 2026-23

AN ORDINANCE AMENDING CHAPTER 222 OF THE CODE OF COLTS NECK TOWNSHIP ENTITLED "VEHICLES AND TRAFFIC"

WHEREAS, the Colts Neck Township Committee of Colts Neck Township has found that clarification of a certain provision of Chapter 222 of the Code of Colts Neck Township entitled "Vehicles and Traffic" is necessary to ensure adequate access to fire apparatus.

NOW, THEREFORE, BE IT ORDAINED, by the Township Committee of the Township of Colts Neck, in the County of Monmouth, State of New Jersey, as follows: (additions to text indicated by underline; deletions to text indicated by ~~strikeout~~).

SECTION I That Chapter 222 "Vehicles and Traffic", Subsection 23, "Schedule I: No Parking Any Time" is hereby amended as follows:

Name of Street:	**Side:**	**Location:**
Professional Circle	South/West	Entire Length
Trump National Boulevard	North	~~Beginning from a point 80 feet west of State Highway Route 34 to a point 160 feet west of State Highway Route 34 (fire zone)~~ Entire Length

SECTION II: Severability.

If any section, paragraph subsection, clause or provision of this ordinance shall be adjudged invalid, such adjudication shall apply only to the section, paragraph, subsection, clause or provision so adjudged and the remainer of this ordinance shall be deemed valid and effective.

SECTION III: Repealer.

The remainder of all other sections and subsections of the aforementioned ordinance not specifically amended by this ordinance shall remain in full force and effect.

SECTION IV: Inconsistent Ordinance.

All ordinances or parts thereof inconsistent with the provisions of this ordinance are hereby repealed as to such inconsistency.

SECTION V: This ordinance shall take effect immediately upon passage, publication and filing according to law.

The foregoing Ordinance was introduced and passed on the first reading at the meeting of the Township Committee of Colts Neck Township on the October 14, 2026 and will be considered for final passage and adoption on October 28, 2026, 6:30 p.m. Town Hall, 1 Veterans Way at which time and place a public hearing will be held for all persons desiring to be heard thereon will be given full opportunity.

_____

Kathleen Capristo, Municipal Clerk

RECORD OF VOTE										
	First Reading					Second Reading				
	October 14, 2026					October 28, 2026				
	M	S	Yes	No	NV	Ab	M	S	Yes	No	NV	Ab
Mayor Viola												
Deputy Mayor Buzzetta												
Rizzuto												
Torchia Buss												
Tobia												

M - Moved S - Seconded X - indicates vote NV - Not Voting Ab - Absent

ORDINANCE 2026-24

AN ORDINANCE OF COLTS NECK TOWNSHIP IN THE COUNTY OF MONMOUTH AND THE STATE OF NEW JERSEY AMENDING AND SUPPLEMENTING CHAPTER 102, "DEVELOPMENT REGULATIONS," PART 4 ZONING AND DESIGN REQUIREMENTS FOR RESIDENTIAL DISTRICTS, ARTICLE VIII ZONING REQUIREMENTS, SUBSECTION 102-87 SCHEDULE OF LIMITATIONS: RESIDENTIAL AND AGRICULTURAL OF THE CODE OF COLTS NECK TOWNSHIP.

WHEREAS, ON APRIL 23, 1997, The Colts Neck Township Committee amended in is entirety Chapter 102, Development Regulations of the Code of Colts Neck Township;

WHEREAS, Colts Neck Township is continuously and closely involved in the planning and development process in the Township; and

WHEREAS, one of the purposes of planning is to review the Township's policies and Development Regulations based on best available information and past experiences and to adopt regulations to guide the use of lands in a manner that promotes the public good and general public welfare, and

WHEREAS, a review of the Code has certain errors and omissions regarding the applicability of the "90 foot rule" in the A-5, Rural Residential District and the A-7 Residential District, and

WHEREAS, making clear that footnote No. 1 applies to the A-5 Rural Residential District and the A-7 Residential District will eliminate confusion for the public, staff and enforcement officials, and

WHEREAS, the purposes of this ordinance is to clarify and accurately reflect the intent of the 90 foot rule as originally adopted by the governing body, and

WHEREAS, the Township Committee has determined that adoption of this ordinance confirming the applicability of the "90 foot rule" to the A-5 Rural Residential District and the A-7 Residential District is in the best interest of the health, safety and welfare of the community.

NOW, THEREFORE, BE IT ORDAINED by the Township Committee of the Township of Colts Neck, County of Monmouth, State of New Jersey as follows: (additions to text indicated by underline; deletions to text indicated by ~~strikeout~~).

SECTION 1: That Section 102-87 Schedule of Limitations: residential and agricultural be amended and supplemented in the following parts only.

§ 102-87. Schedule of limitations: residential and agricultural.

[Amended 4-14-1999; 6-9-1999; 11-10-1999; 12-16-2020 by Ord. No. 2020-21; 6-29-2022 by Ord. No. 2022-8]

Schedule of Limitations: Residential and Agricultural

	District						
Type	**A-1**	**A-2**	**A-3**	**A-4**	**A-5**	**AG**	**A-7**
Minimum lot area, interior (square feet)	88,000	40,000	30,000	§ 102-85	220,000	§ 102-86	40,000
Minimum lot area, corner (square feet)	N/A	N/A	35,000	N/A	N/A	N/A	N/A
Minimum lot frontage	300 ft.[1]	200 ft.[1]	150 ft.[1]	§ 102-85[1]	400 ft[1]	§ 102-86[1]	150 feet[1]

Schedule of Limitations: Residential and Agricultural

	District						
Minimum lot width	300 ft.	200 ft.	150 ft.	§ 102-85	400 ft.	§ 102-86	150 feet
Minimum lot depth	200 ft.	175 ft.	150 ft.	§ 102-85	400 ft.	§ 102-86	175 feet
Minimum yards							
Principal buildings (see definitions in § 102-4)							
Front yard	75 ft.[1]	75 ft.[1]	75 ft.[1]	§ 102-85	75 ft.[1]	§ 102-86[1]	75 feet [1]
Side yard (each)	50 ft.[1]	40 ft.[1]	30 ft.[1]	§ 102-85	50 ft.[1]	§ 102-86[1]	40 feet [1]
Rear yard	50 ft.[1]	25 ft.[1]	15 ft.[1]	§ 102-85	50 ft.[1]	§ 102-86[1]	40 feet [1]
Accessory buildings							
Front yard	100 ft.	100 ft.	100 ft.	§ 102-85	100 ft.	§ 102-86	100 feet
Side yard	50 ft./ 25 ft.[8][1]	25 ft.	15 ft.	§ 102-85	50 ft.	§ 102-86	40 feet
Rear yard	50 ft./ 25 ft.[9][2]	25 ft.	15 ft.	§ 102-85	50 ft.	§ 102-86	40 feet
To another building	20 ft.	20 ft.	20 ft.	§ 102-85	20 ft.	§ 102-86	20 feet
For more specific requirements, see § 102-48.							
Maximum building coverage							
Principal buildings							
One-story	10%	10%	10%	§ 102-85	10%	§ 102-86	10%
Two-story	6.6%	6.6%	6.6%	§ 102-85	6.6%	§ 102-86	6.6%
Accessory buildings	5%	5%	5%	§ 102-85	5%	§ 102-86	5%
Maximum lot coverage (see definitions)	20%	20%	30%	40%	20%	§ 102-86	20%
Maximum building height							
Number of stories	2.5	2.5	2.5	§ 102-85	2.5	§ 102-86	2.5
Height	35 ft.	35 ft.	35 ft.	§ 102-85	35 ft.	§ 102-86	35 feet

NOTES:

General notes applicable to all categories:

[a]Where two or more requirements apply to a situation, the more stringent requirement shall apply.

[b]Unless specifically stated otherwise in this chapter, the following may be located in the yard areas required for principal buildings: parking and loading areas with related aisles and driveways; fences and walls not exceeding four feet in height; mailboxes, signs, lampposts, flagpoles, wells, septic systems and similar structures. In addition, the following parts of a principal building may extend into

the required yard areas up to a maximum of two feet: chimneys, bay windows, eaves, gutters and downspouts.

[Amended 5-25-2005]

[c]A minimum of 85% of the minimum required lot area or a minimum of 75,000 square feet, whichever is smaller, in all zones must be free of wetlands and associated buffer areas; floodplains; conservation, open space, drainage and right-of-way easements, landscaping easements, drainage easements, special water resource protection areas, scenic viewshed boundary and similar environmental features or encumbrances which restrict development of the property.

[Amended 5-25-2005]

Specific notes applicable where indicated:

[1]Lot frontage; building projection.

[Amended 12-29-1999]

(a) The lot frontage in any residential zone may be reduced to not less than 75% of the required frontage on those lots abutting streets on an outside curve having a centerline radius of 500 feet or less, provided that the resulting subdivision conforms to good subdivision design practices. In the A-1, A-2, A-5, A-7 and AG Zones, if the length of the principal building, projected on the front lot line for building width projection (said line being defined in § **102-4**), exceeds 90 feet, the required front, each side and rear yard setback requirements shall be increased one foot for each foot the building projection exceeds 90 feet. In determining whether the principal building projected on the front line for building width projection exceeds 90 feet, the following process shall be utilized:

[Amended 5-25-2005]

[1] Extend the minimum side yard setback on each side to intersect the front lot line.

[2] Connect the two intersecting points created by Subsection [1] above with a straight line and extend beyond the intersection points, as needed, for Subsection [3] below.

[3] Project at a 90º angle to the line created in Subsection [2], a new straight line on each side of the structure and position it so that it touches the outermost portion of the structure.

[4] Measure at right angles the distance between the two lines created in Subsection [3] above. This is the length of the principal building projected on the front lot line.

(b) Figures 1, 2, 3, 4 and 5 are set forth as part of the appendix to Chapter **102** to illustrate this section.[3]

[2]Applies to accessory structures of 150 square feet or less.

[1] *Editor's Note: Applies to accessory structures of 150 square feet or less*
[2] *Editor's Note: Applies to accessory structures of 150 square feet or less*
[3] *Editor's Note: Figures 1 through 5 are **included at the end of this chapter**.*

SECTION II: Severability.

If any section, paragraph subsection, clause or provision of this ordinance shall be adjudged invalid, such adjudication shall apply only to the section, paragraph, subsection, clause or provision so adjudged and the remainer of this ordinance shall be deemed valid and effective.

SECTION III: Repealer.

The remainder of all other sections and subsections of the aforementioned ordinance not specifically amended by this ordinance shall remain in full force and effect.

SECTION IV: Inconsistent Ordinance.

All ordinances or parts thereof inconsistent with the provisions of this ordinance are hereby repealed as to such inconsistency.

SECTION V: This ordinance shall take effect immediately upon passage, publication and filing according to law.

The foregoing Ordinance was introduced and passed on the first reading at the meeting of the Township Committee of Colts Neck Township on the October 14, 2026 and will be considered for final passage and adoption on October 28, 2026, 6:30 p.m. Town Hall, 1 Veterans Way at which time and place a public hearing will be held for all persons desiring to be heard thereon will be given full opportunity.

_____
Kathleen Capristo, Municipal Clerk

RECORD OF VOTE										
	First Reading					Second Reading				
	October 14, 2026					October 28, 2026				
	M	S	Yes	No	NV	Ab	M	S	Yes	No	NV	Ab
Mayor Viola												
Deputy Mayor Buzzetta												
Rizzuto												
Torchia Buss												
Tobia												

M - Moved S - Seconded X - indicates vote NV - Not Voting Ab - Absent

ORDINANCE 2026-25

AN ORDINANCE OF COLTS NECK TOWNSHIP IN THE COUNTY OF MONMOUTH AND THE STATE OF NEW JERSEY AMENDING AND SUPPLEMENTING THE CODE OF THE TOWNSHIP OF COLTS NECK

WHEREAS, the Township is authorized under the laws of the State of New Jersey to enact ordinances and regulations necessary to protect the public health, safety, and welfare of its residents; and

WHEREAS, Appendix D of the International Fire code provides standards for fire apparatus access roads, including requirements related to road width, vertical clearance, turning radius, grade, dead-end roads, and other access features necessary for emergency response operations; and

WHEREAS, adequate fire apparatus access is essential to ensure timely emergency response, enhance fire fighter safety and protect life and property from the hazards of fire and other emergencies; and

WHEREAS, the Township Fire Official and Executive Fire Council have reviewed the provisions of Appendix D and have recommended its adoption as being in the best interest of the Township; and

WHEREAS, the Township Committee has reviewed the provisions of Appendix D, Fire Apparatus Access Roads, of the most recent edition of the International Fire Code; and

WHEREAS, the Township Committee finds that the standards contained in Appendix D of the International Fire Code establishes reasonable and necessary requirements for emergency vehicle access to buildings; and

WHEREAS, the Township Committee further finds that adoption of Appendix D of the International Fire Code will assist emergency responders in carrying out their duties effectively and will reduce risk to life, property, and public welfare.

NOW, THEREFORE, BE IT ORDAINED by the Township Committee of the Township of Colts Neck, County of Monmouth, State of New Jersey as follows: (additions to text indicated by underline; deletions to text indicated by ~~strikeout~~).

SECTION I: That Chapter 29, Fire Prevention Bureau, of the Code of Colts Neck Township be amended and supplemented in the following parts only:

§29-8 ~~Technical Amendments~~ Fire Apparatus Access Roads

Appendix D of the International Fire Code, as amended and supplemented, shall be herein adopted.

SECTION II: That Chapter 102, Development Regulations, Subsection 98, Multifamily provisions be amended and supplemented to add subsections I and J as follows:

§ 102-98 Multifamily provisions

I. Multifamily residential projects having more than 100 dwelling units shall be equipped throughout with a minimum of two separate fire apparatus access roads.

J. Remoteness. Where two fire apparatus access roads are required by I above, they shall be placed a distance apart equal to not less of one-half of the length of the maximum overall diagonal dimension of the property or area to be served measured in a straight line between accesses.

SECTION III: That Chapter 102, Development Regulations, Subsection 109, Business districts be amended and supplemented to add new subsection J entitled "Fire apparatus access" as follows:

§ 102-109 Business districts

J. Fire apparatus access

1. Facilities, buildings or portions of buildings herein constructed shall be accessible to fire department apparatus by way of an approved access road or parking lot access isle with an asphalt, concrete surface capable of supporting the imposed load of five apparatus weighing up to 75,000 pounds.

2. Dead-end fire apparatus access roads or parking lot access isle in excess of 150 feet shall be provided with a turnaround provision in accordance with Figure 109-2 Dead-End Fire Apparatus Access Road Turnaround.

FIGURE 109-2 DEAD-END FIRE APPARTUS ACCESS ROAD TURNAROUND

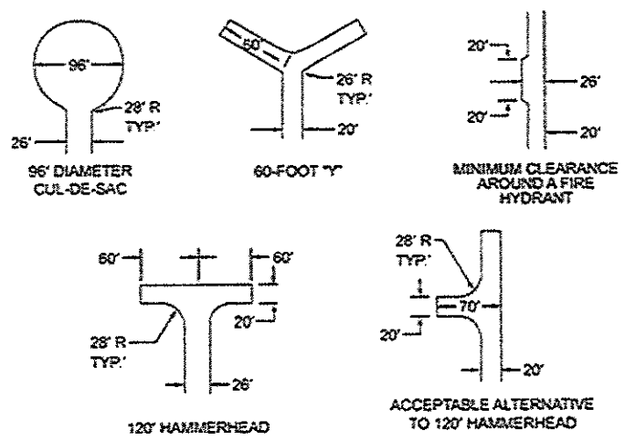

For SI: 1 foot = 304.8 mm.

3. Buildings of facilities having a gross floor area of more than 62,000 square feet shall be provided with two separate fire apparatus access roads.

4. Where two fire apparatus access roads are required, they shall be placed a distance apart equal to not less than one-half of the length of the maximum overall diagonal dimension of the lot or area to be served, measured in a straight line between accesses.

SECTION IV: Severability.

If any section, paragraph subsection, clause or provision of this ordinance shall be adjudged invalid, such adjudication shall apply only to the section, paragraph, subsection, clause or provision so adjudged and the remainer of this ordinance shall be deemed valid and effective.

SECTION V: Repealer.

The remainder of all other sections and subsections of the aforementioned ordinance not specifically amended by this ordinance shall remain in full force and effect.

SECTION VI: Inconsistent Ordinance.

All ordinances or parts thereof inconsistent with the provisions of this ordinance are hereby repealed as to such inconsistency.

SECTION VII: This ordinance shall take effect immediately upon passage, publication and filing according to law.

The foregoing Ordinance was introduced and passed on the first reading at the meeting of the Township Committee of Colts Neck Township on the October 14, 2026 and will be considered for final passage and adoption on October 28, 2026, 6:30 p.m. Town Hall, 1 Veterans Way at which time and place a public hearing will be held for all persons desiring to be heard thereon will be given full opportunity.

_____

Kathleen Capristo, Municipal Clerk

RECORD OF VOTE										
	First Reading					Second Reading				
	October 14, 2026					October 28, 2026				
	M	S	Yes	No	NV	Ab	M	S	Yes	No	NV	Ab
Mayor Viola												
Deputy Mayor Buzzetta												
Rizzuto												
Torchia Buss												
Tobia												

M - Moved S - Seconded X - indicates vote NV - Not Voting Ab - Absent