CITY OF WISCONSIN DELLS MEETING AGENDA

Meeting Description PUBLIC WORKS COMMITTEE

Date: MONDAY, AUGUST 8, 2022 Time: 5:15 PM

Location: MUNICIPAL BUILDING, 300 LA CROSSE STREET, WISCONSIN DELLS, WI

Committee Members			
Ald. Terry Marshall-Chair	Mayor Ed Wojnicz	Ald. Brian Holzem	Ald. Jesse DeFosse

AGENDA ITEMS:	
1	Call Meeting to Order and Attendance
2	Approval of the Minutes from the July 11, 2022 Public Works Meeting
3	Discussion / Decision on Well #3 pump replacement or repair (Update – Approved in July up to $60k)
4	Discussion / Decision on City Maintenance Shop
5	Discussion / Decision on extending Water and Sewer north on 9th Ave
6	Discussion / Decision on Wis Dells Parkway Project (2025)
7	Discussion / Decision on Hwy 12 North Project (2024)
8	Discussion / Decision on 600 block Broadway Speed Sign
9	Any other items for referral to a future meeting
10	Future Public Works Meeting (Monday, September 12th 2022)
11	Adjournment
12	
13	
14	
	Open Meetings Notice: If this meeting is attended by one or more members of the Common Council who are not members of this committee, their attendance may create a quorum of another city commission, board or committee under the Wisconsin Open Meetings Law; However, no formal action will be taken by any governmental body at the above stated meeting other than the body, committee, commission, or board identified in this meeting notice. Please be advised that upon reasonable notice, the City of Wisconsin Dells will furnish appropriate auxiliary aids and services to afford individuals with disabilities an equal opportunity to participate in meeting activities.
	Alderperson Terry Marshall, Chairperson Distributed August 5, 2022

MEETING NOTES

PUBLIC WORKS COMMITTEE
CITY OF WISCONSIN DELLS
MUNICIPAL BUILDING-300 LA CROSSE STREET
JULY 11, 2022

Chairperson Marshall called the meeting to order at 5:30PM. Notice of the meeting was provided to the Dells Events, WNNO Radio, and posted in accordance with State Statutes.

1. Present: Chairperson Terry Marshall, Mayor Ed Wojnicz and Ald. Brian Holzem and Ald. Jesse DeFosse
   Others: Public Works Director Chris Tollaksen, City Atty. Joseph Hasler, DPW Office Clerk Monica Dorow-Leis, Finance Director Karen Terry, Ald. Mike Freel, Ald. Dan Anchor, Fire Chief Pat Gavinski, Police Chief Nick Brinker, and Mary Panzer

2. Motion by Mayor Wojnicz and seconded by Ald. Holzem approve the minutes of the June 13, 2022 meeting. Motion carried.

3. Motion by Ald. DeFosse and seconded by Ald. Holzem recommend to council approve the claim filed by Steven Carlton & Joe Kaminski in the amount of $1,543.22. Motion carried.

4. Motion by Ald. Marshall and seconded by Ald. Holzem recommend to council approve Well #3 pump replacement or repair not to exceed $60,000. Motion carried.

5. Motion by Ald. Holzem and seconded by Ald. DeFosse recommend to council approve MSA Task Order (MSA Project #00085123) for Project Name: Wis Dells Parkway Utility Relocates with WisDOT Reconstruction Project in the amount of $58,900. Motion carried.

6. Motion by Ald. Holzem and seconded by Ald. DeFosse recommend to council approve MSA Task Order (MSA Project #00085126) for Project Name: 9th Ave Utility Extensions in the amount of $40,000. Motion carried.

7. It was initially discussed to extend the water and sewer 650' north on 9th Avenue. There is an existing resident inquiring about extending services to their property on 9th Avenue. At this time, our utility services are not available. PW Director Chris Tollaksen included Engineer's Estimates of Probable Costs with extension scenarios. This item was discussion only.

8. <u>Discussion on City Maintenance Shop:</u>
   a) The City needs about 10 acres for the City Maintenance Shop. It would cost approximately an additional 500K to extend the utilities to the 10 acres noted in the agenda packet.
   b) If the City would choose to locate the Shop on the 10 acres noted in the packet, a new pump would probably have to be added/installed. The total cost for utilities and driveways would be approximately 1.3M.
   c) If the City were to choose extending utilities to the 10 acres noted, the City would pay the costs upfront with around $375K collectable through a deferred assessment. The deferred assessments would not be collectable until the properties are annexed into the City.
   d) They discussed other potential areas to consider for a new City Maintenance Shop.
   e) The Mayor suggested he reach out to the property owner(s) east of Oak Lawn Subdivision on State Hwy 23. Other properties discussed included a smaller property in the Business Park, existing shop property and property adjacent to the current shop, all with unknown costs to obtain ownership of these properties. Another option may be to expand to the west of the current shop in combination of school property adjacent to the

cemetery/shop area. The City would retain the existing Public Works Shop and use it for overflow storage. The total price for a new shop would be approximately 16-19M.

f) A new shop is needed, but need to work towards dollar amount needed. Amount would increase with the additional costs with acquiring land, etc.

g) Budget costs needed for this project need to be to Karen by September at the latest.

The City needs to commit to a dollar amount for Admin. Karen Terry move forward. If there are more infrastructure and land acquisition needs, that is where it is going to start to change the conversation financially. This item was discussion only and Admin. Karen Terry will bring to Finance with the Committee alright with Finance making the decision. This item was discussion only.

9. A letter was received from Public Service of Wisconsin (PSC) dated 7/7/22 for Electric Rate Case 6610-ER-106. It states that the originally proposed revenue requirement was based on a 4.9 percent return on net investment rate base, which was the benchmark for municipal rate cases as of March 7, 2022. As of July 4, 2022, it is based on a 6 percent return on net investment rate base. The audiovisual hearing on the application is scheduled for Wednesday, July 20, 2022 at 10am. This item was updated information only.

10. Motion by Ald. Holzem and seconded by Mayor Wojnicz recommend to Legislative allow golf carts and regulated low speed vehicles consistent with State law on the south side of Broadway. Motion carried.

11. Update on Public Works Projects: Race Street should be open by the end of the week. Fitzgerald Road is scheduled to get paved this week. The RiverWalk Art Park is open for pedestrian traffic, the but artwork is not in yet.

12. Referred to the next meeting: Speed sign for 600 Block of Broadway.

13. The next meeting is scheduled for Monday, August 8, 2022.

14. Motion by Ald. Holzem and seconded by Mayor Wojnicz to adjourn. Motion carried and the meeting adjourned at 6:42 pm.

Monica Dorow-Leis
Public Works Office Clerk

Item 3

CTW Corporation

Wells - Pumps - Controls

July 25, 2022

WISCONSIN DELLS WATER DEPARTMENT
MR. CHRIS TOLLAKSEN, DIRECTOR OF PUBLIC WORKS

Re: Wisconsin Dells Well #3 Revised Cost Estimates for Replacement Pump

Dear Mr. Tollaksen,

The following is an updated estimate for the 8" column option with a Goulds pump also added.

1.	Goulds bowl assembly, 84% efficiency, 8 week delivery	$13.032 + $1200 frt est
2.	Simflo bowl assembly, 80% efficiency, 2-3 week delivery	~~$10,158 + $1200 frt est~~
3.	Tailpipe with ss cone strainer	$945
4.	200 LF 8" column and coupling	$10,800
5.	Two 5' x 8" column w/one coupling	$837
6.	21 column spiders, 8"	$2551
7.	150 lf of replacement ss lineshaft	$6293
8.	Replacement headshaft	$460
9.	Alternate 8" Layne head, refurbished	$1700
10.	Raise piping with flange filler, less concrete removal	$2190
11.	Rebuild stuffing box,, airline, rubber bearings	$1740
12.	Labor and equipment for removing and resetting well pump	$6000 to $8000
13.	Brush and Bail well	$ 1800

Total = $51,548

I am providing this estimate for you and your committee to review and to clearly see the pump options. Feel free to contact me with any questions or comments and with your decision on the pump selection.

Thank You,
Tom Goethel, CTW Corporation
Cc : Hunter Cummens , Troy Simonar CTW Corporation

21500 W. Good Hope Road, Lannon, WI 53046
www.ctwcorporation.com (262) 253-6613 Branches: Baraboo, Eau Claire, Green Bay, La Crosse

Item 4

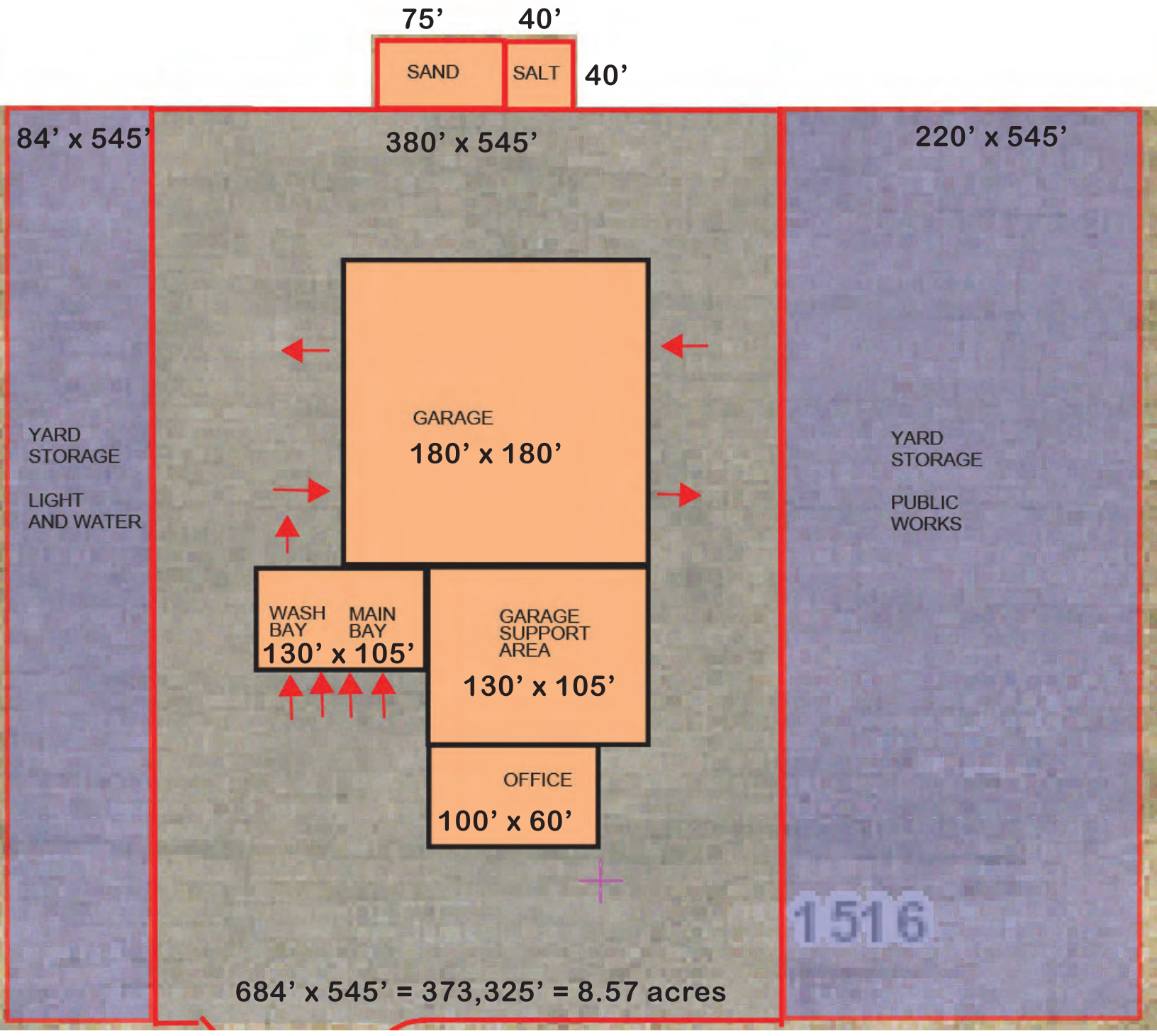
75’
40’
SAND
SALT
40’
84’ x 545’
380’ x 545’
220’ x 545’
GARAGE
180’ x 180’
YARD
STORAGE
LIGHT
AND WATER
YARD
STORAGE
PUBLIC
WORKS
WASH
BAY
MAIN
BAY
130’ x 105’
GARAGE
SUPPORT
AREA
130’ x 105’
OFFICE
100’ x 60’
1516
684’ x 545’ = 373,325’ = 8.57 acres

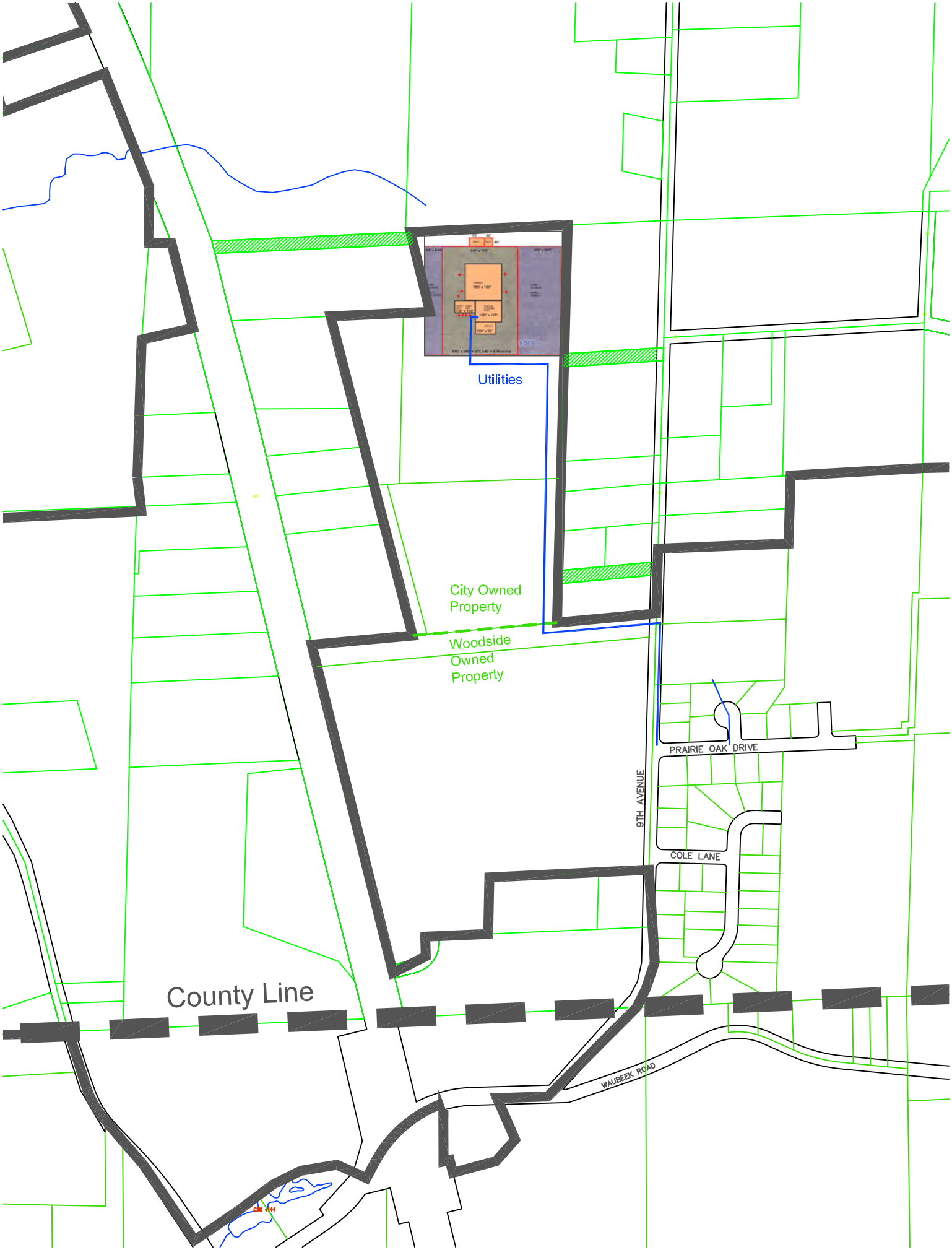
Utilities
City Owned Property
Woodside Owned Property
PRAIRIE OAK DRIVE
9TH AVENUE
COLE LANE
County Line
WAUBEEK ROAD

Item 6

Project Schedule

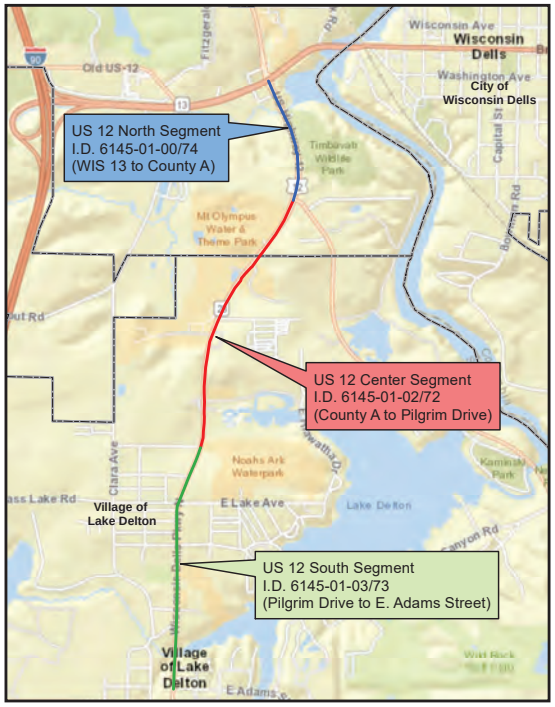

Project Location Map

	2021	2022				2023				2024				2025				2026			
WIS 13 to E. Adams Street																					
Public Involvement Meeting #1 (12/14/21)	★																				
Environmental Analysis		■	■	■																	
Public Involvement Meeting #2 (3/22/22)			★																		
Environmental Document (Draft ER)			■																		
Public Hearing (7/22)				★																	
Environmental Document Approval (7/22)				★																	
Preliminary Engineering & Design		■	■	■	■																
Public Involvement Meeting #3					★																
WIS 13 to Cnty A & Cnty A to Pilgrim Dr.																					
Final Design & Right-of-Way Acquisition						■	■	■	■	■	■	■	■								
Construction															■		■				
Pilgrim Drive to E. Adams Street																					
Final Design & Right-of-Way Acquisition						■	■	■	■	■	■	■	■	■	■	■	■				
Construction																			■		■



March 22, 2022

Project ID 6145-01-72/73/74
US 12 (Wisconsin Dells Parkway)
WIS 13 to E. Adams Street
Sauk County

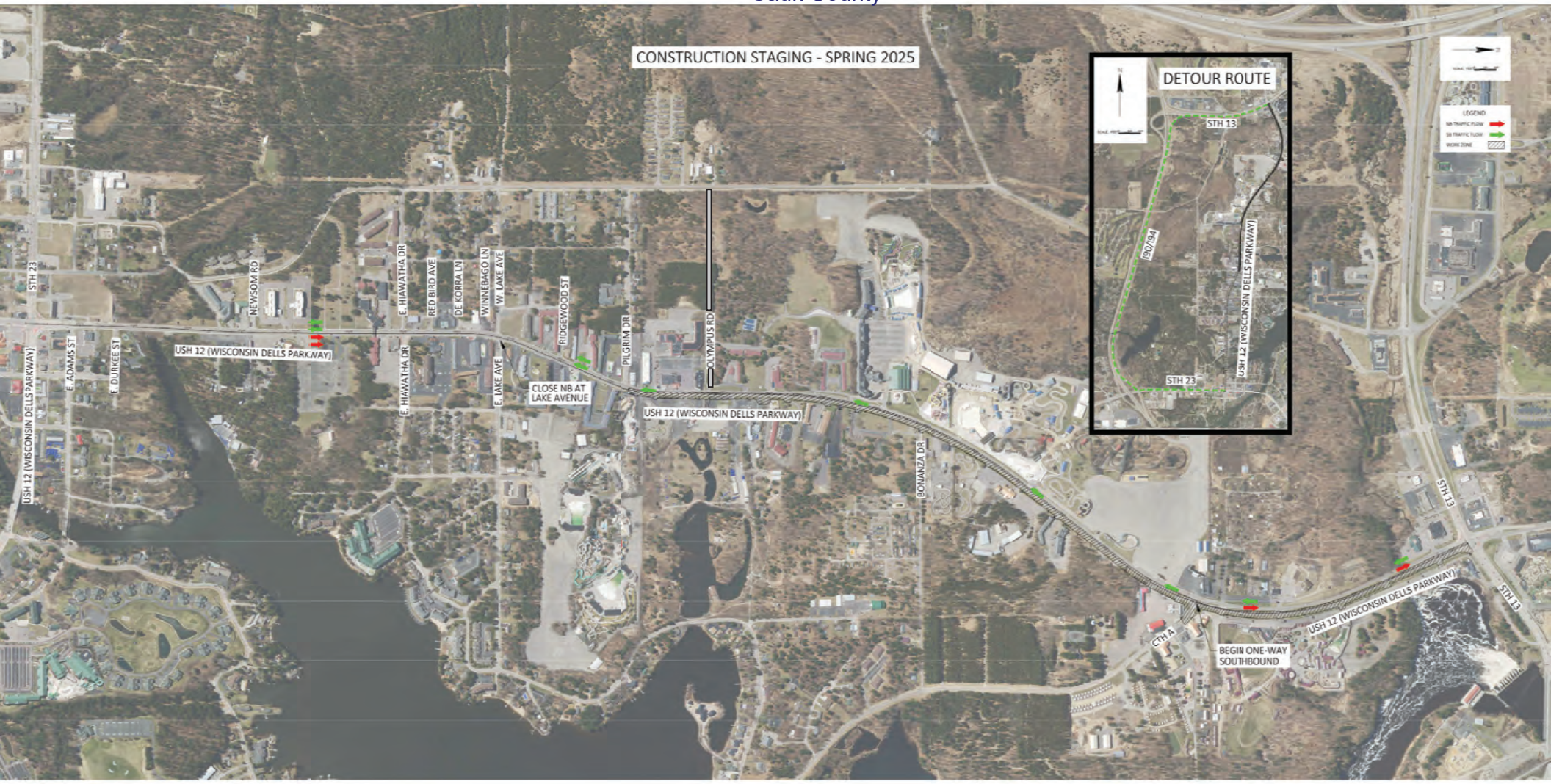

DRAFT Construction Staging
June 9, 2022

Project ID 6145-01-72/73/74
US 12 (Wisconsin Dells Parkway)
WIS 13 to E. Adams Street
Sauk County



DRAFT Construction Staging
June 9, 2022

Project ID 6145-01-72/73/74
US 12 (Wisconsin Dells Parkway)
WIS 13 to E. Adams Street
Sauk County



DRAFT Construction Staging
June 9, 2022

Project ID 6145-01-72/73/74
US 12 (Wisconsin Dells Parkway)
WIS 13 to E. Adams Street
Sauk County

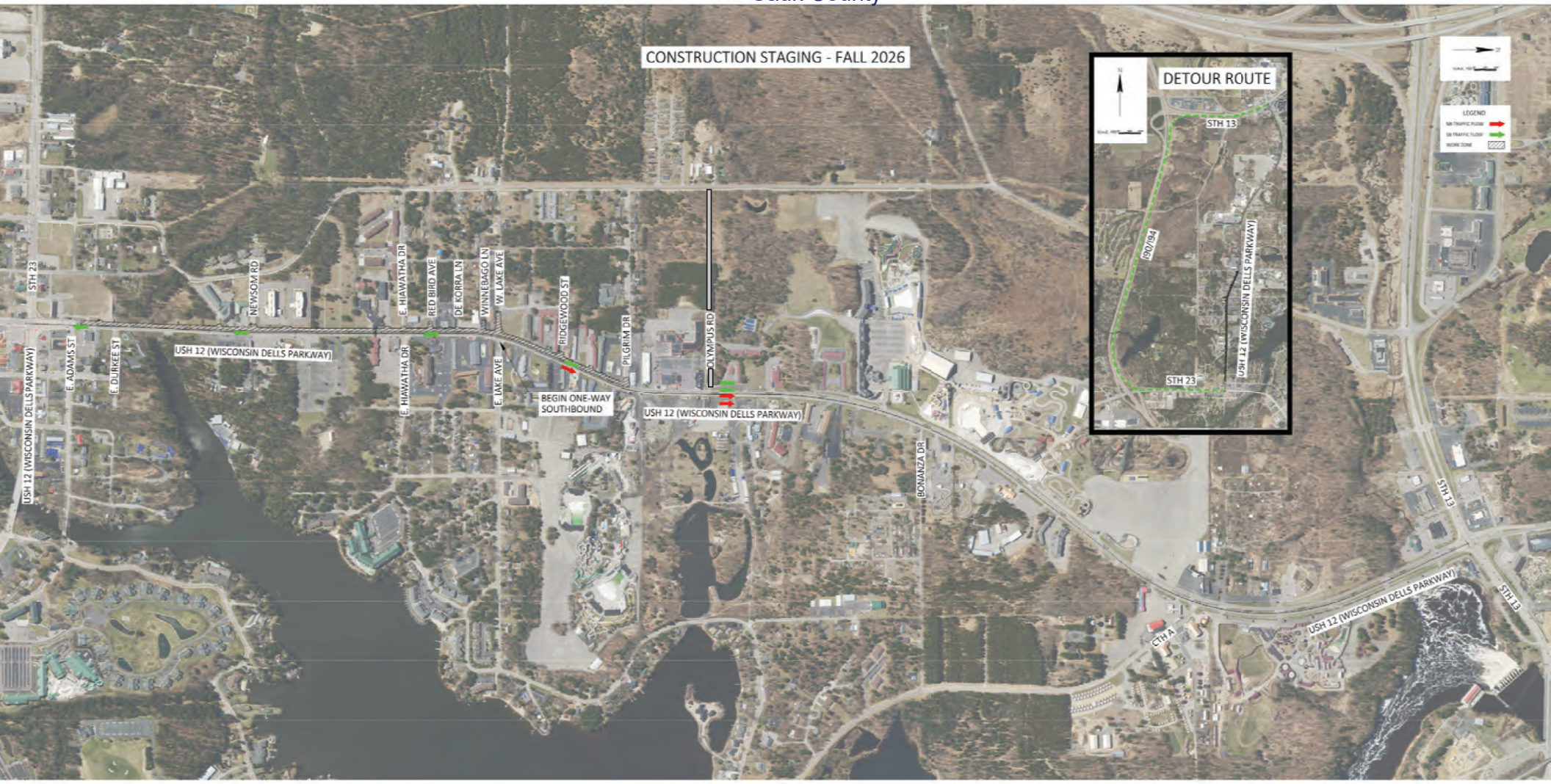

DRAFT Construction Staging
June 9, 2022

2

NORTH SEGMENT - SPRING 2025

CTH A TO STH 23

I.D. 6145-01-74

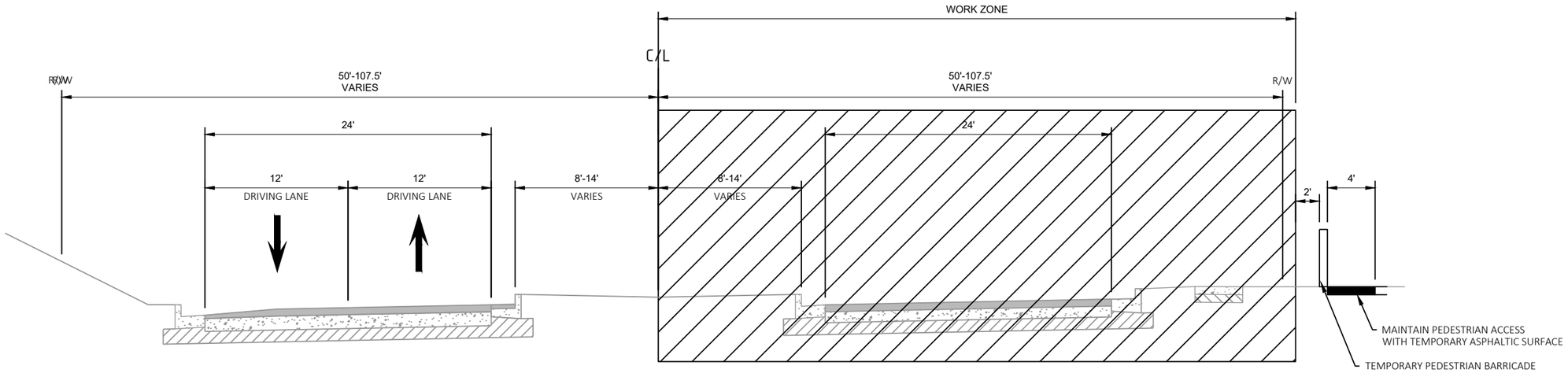

CENTRAL SEGMENT - SPRING 2025

PILGRIM DR TO CTH A

I.D. 6145-01-72

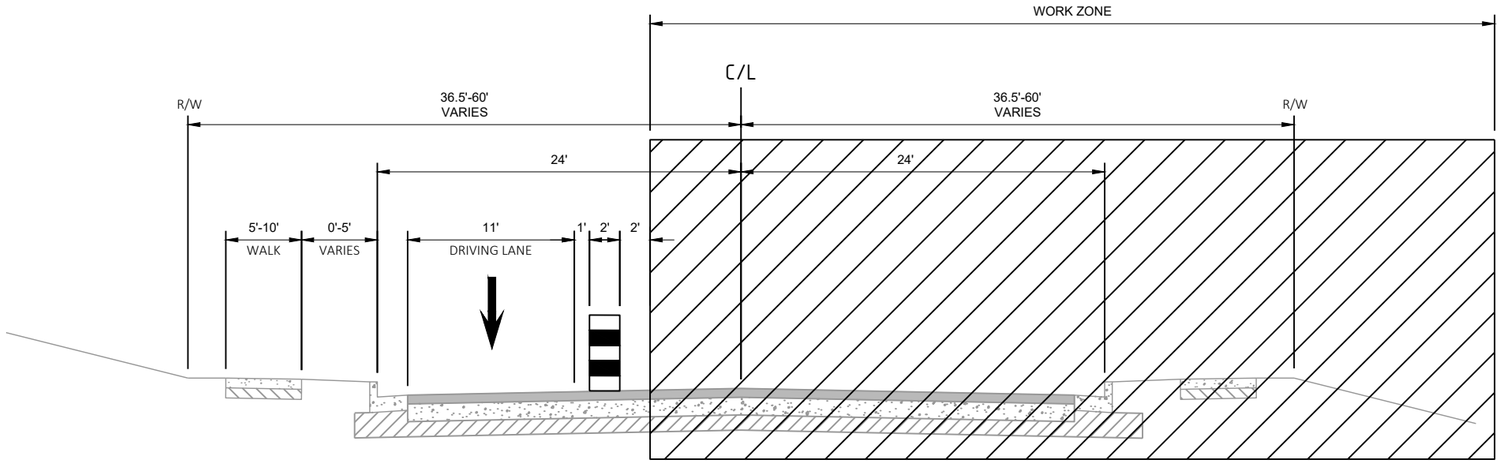

SOUTH SEGMENT - SPRING 2025

E ADAMS ST TO PILGRIM DR

I.D. 6145-01-73

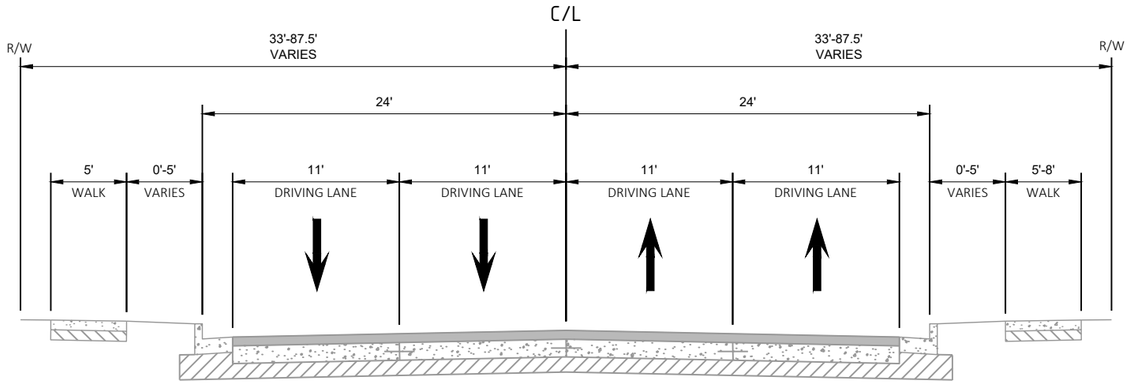

PROJECT NO: 6145-01-72/73/74	HWY: USH 12	COUNTY: SAUK	TRAFFIC CONTROL TYPICAL SECTIONS SPRING 2025	SHEET	E

2

NORTH SEGMENT - SUMMER 2025

CTH A TO STH 23

I.D. 6145-01-74

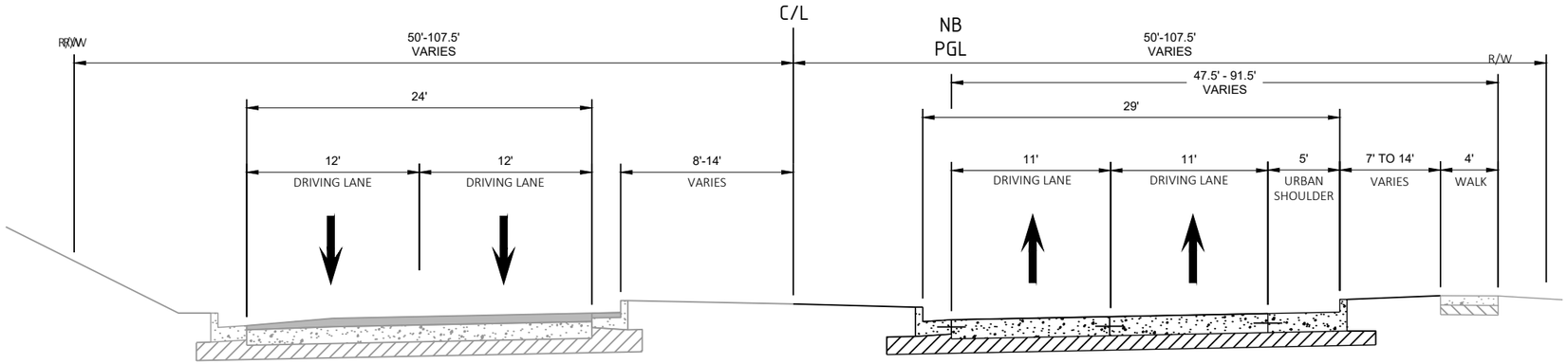

CENTRAL SEGMENT - SUMMER 2025

PILGRIM DR TO CTH A

I.D. 6145-01-72

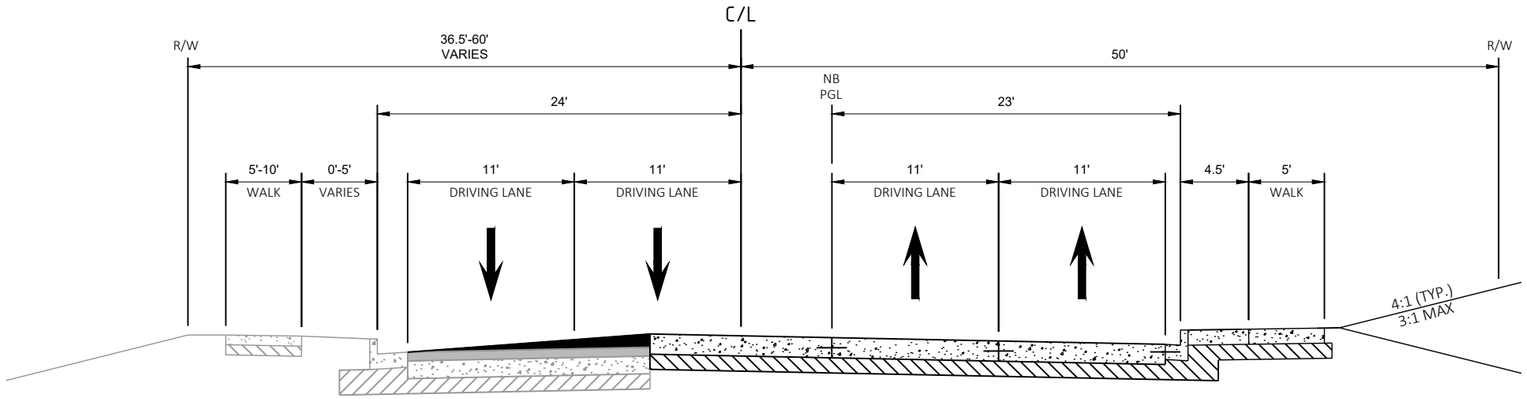

SOUTH SEGMENT - FALL 2025

E ADAMS ST TO PILGRIM DR

I.D. 6145-01-73

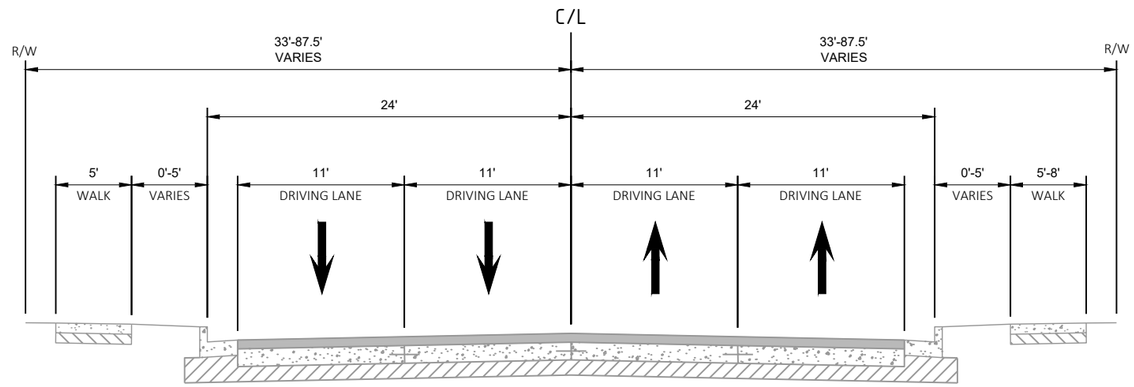

PROJECT NO: 6145-01-72/73/74	HWY: USH 12	COUNTY: SAUK	TRAFFIC CONTROL TYPICAL SECTIONS SUMMER 2025	SHEET	E

FILE NAME : X:\ML\2021\20210212\DESIGN\TRANSPORTATION\SHEETSPLAN\6145-01-73\025100_TC.DWG
LAYOUT NAME - Summer 2025

PLOT DATE : 6/6/2022 5:31 PM PLOT BY : DABROWSKI, MATTHEW PLOT NAME : PLOT SCALE : 1 IN:10 FT

2

NORTH SEGMENT - FALL 2025

CTH A TO STH 23

I.D. 6145-01-74

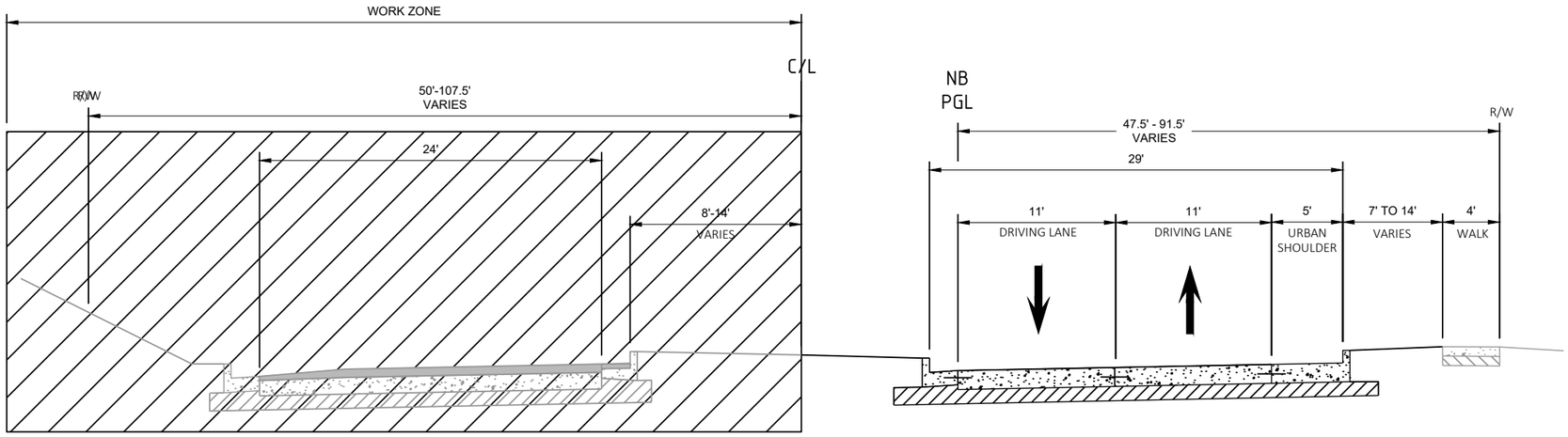

CENTRAL SEGMENT - FALL 2025

PILGRIM DR TO CTH A

I.D. 6145-01-72

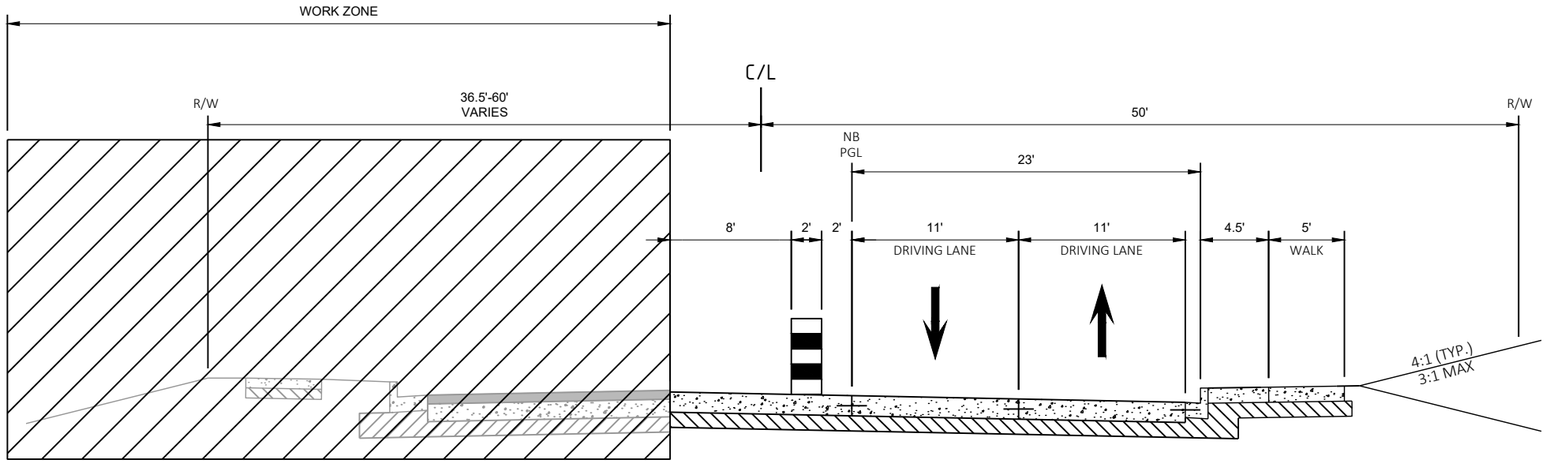

SOUTH SEGMENT - FALL 2025

E ADAMS ST TO PILGRIM DR

I.D. 6145-01-73

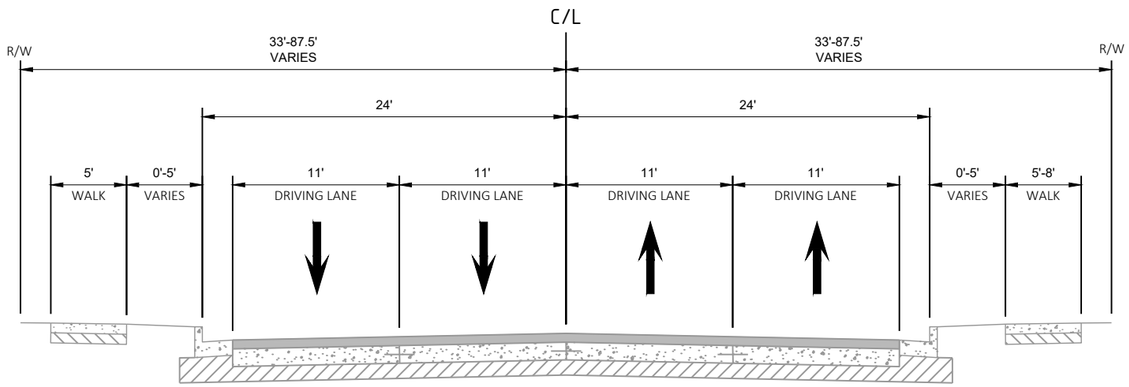

PROJECT NO: 6145-01-72/73/74	HWY: USH 12	COUNTY: SAUK	TRAFFIC CONTROL TYPICAL SECTIONS FALL 2025	SHEET	E

FILE NAME : X:\ML\2021\20210212\DESIGN\TRANSPORTATION\SHEETSPLAN\6145-01-73\025100_TC.DWG
LAYOUT NAME - Fall 2025

PLOT DATE : 6/6/2022 5:31 PM PLOT BY : DABROWSKI, MATTHEW PLOT NAME : PLOT SCALE : 1 IN:10 FT

2

NORTH SEGMENT - SPRING 2026

CTH A TO STH 23

I.D. 6145-01-74

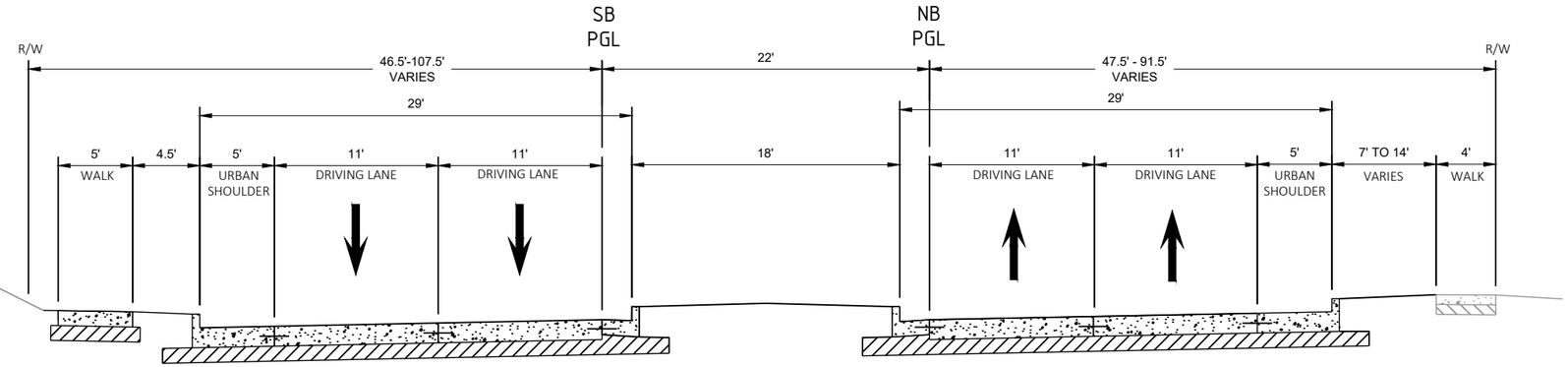

CENTRAL SEGMENT - SPRING 2026

PILGRIM DR TO CTH A

I.D. 6145-01-72

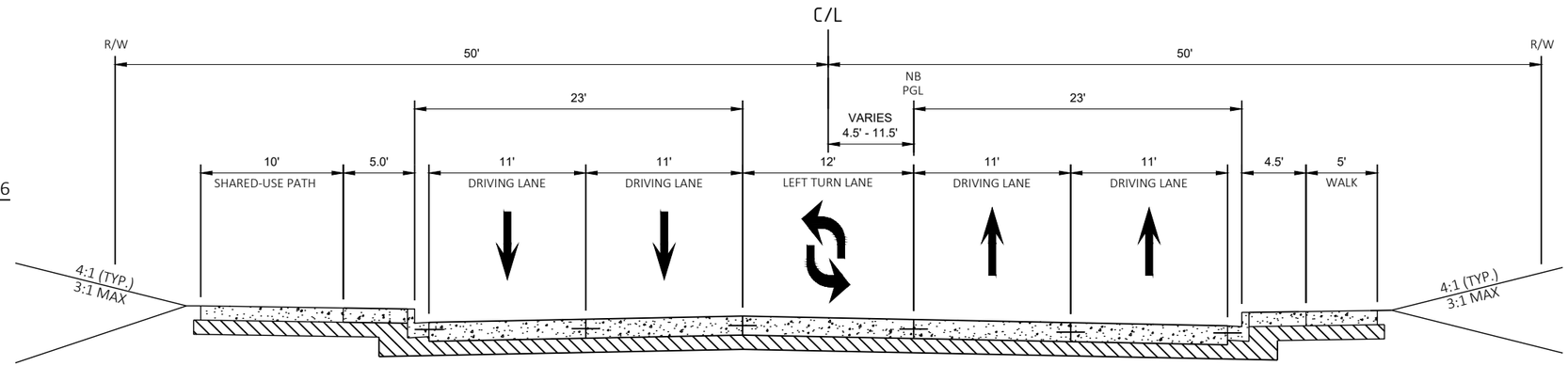

SOUTH SEGMENT - SPRING 2026

E ADAMS ST TO PILGRIM DR

I.D. 6145-01-73

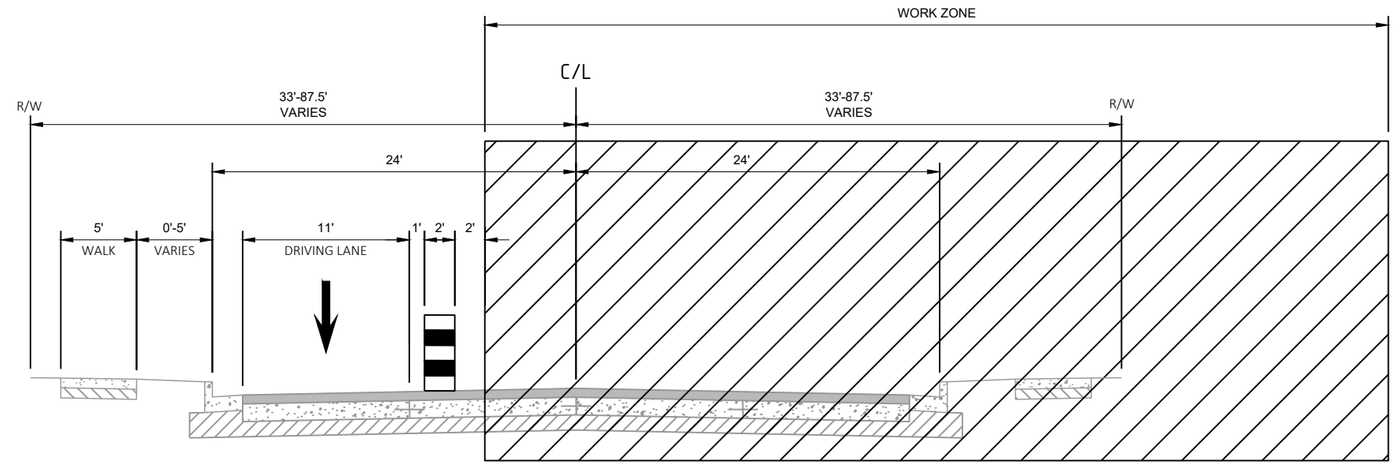

PROJECT NO: 6145-01-72/73/74	HWY: USH 12	COUNTY: SAUK	TRAFFIC CONTROL TYPICAL SECTIONS SPRING 2026	SHEET	E

FILE NAME : X:\ML\2021\20210212\DESIGN\TRANSPORTATION\SHEETSPLAN\6145-01-73\025100_TC.DWG
LAYOUT NAME - Spring 2026

PLOT DATE : 6/6/2022 5:31 PM PLOT BY : DABROWSKI, MATTHEW PLOT NAME : PLOT SCALE : 1 IN:10 FT

WISDOT/CADDS SHEET 42

NORTH SEGMENT - SUMMER 2026

CTH A TO STH 23

I.D. 6145-01-74

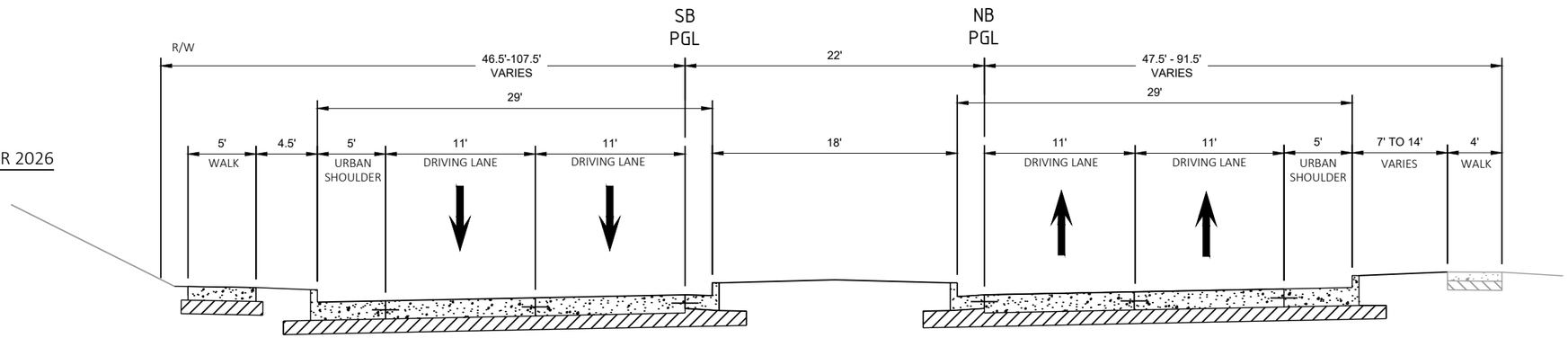

CENTRAL SEGMENT - SUMMER 2026

PILGRIM DR TO CTH A

I.D. 6145-01-72

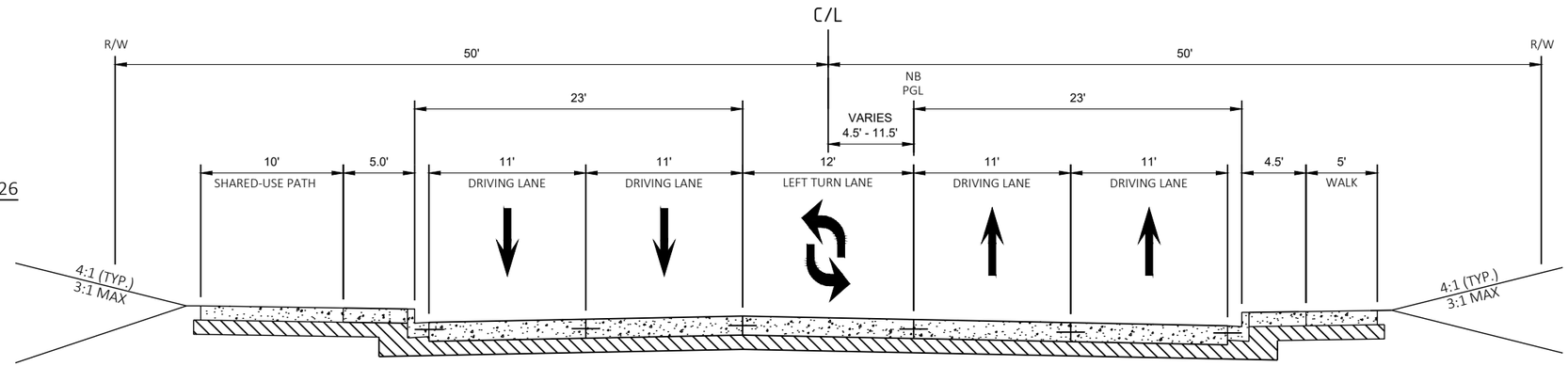

SOUTH SEGMENT - SUMMER 2026

E ADAMS ST TO PILGRIM DR

I.D. 6145-01-73

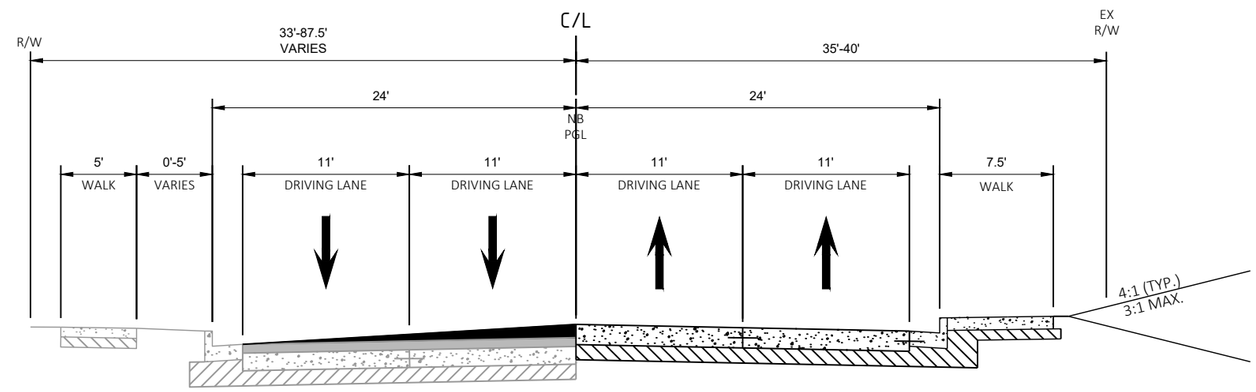

PROJECT NO: 6145-01-72/73/74	HWY: USH 12	COUNTY: SAUK	TRAFFIC CONTROL TYPICAL SECTIONS SUMMER 2026	SHEET	E

2

2

NORTH SEGMENT - FALL 2026

CTH A TO STH 23

I.D. 6145-01-74

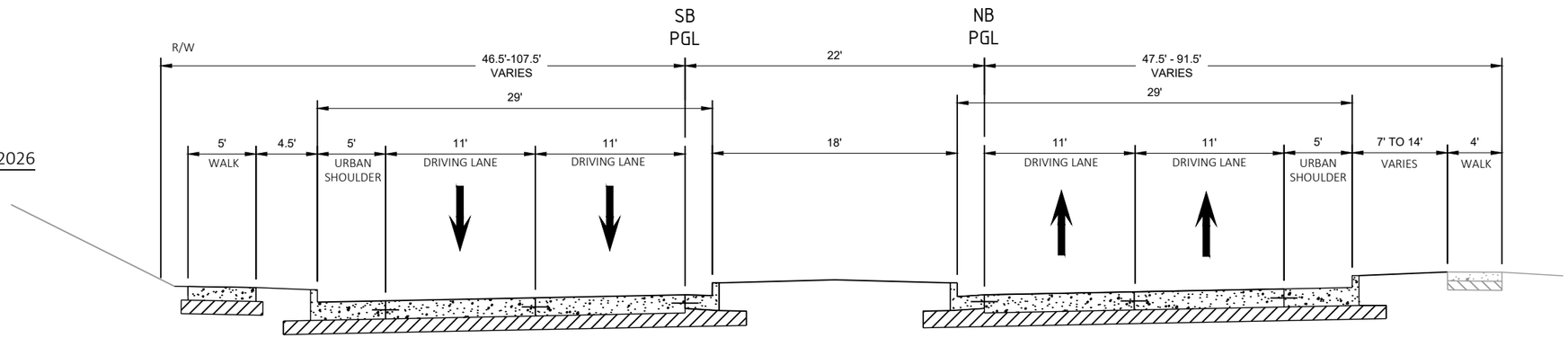

CENTRAL SEGMENT - FALL 2026

PILGRIM DR TO CTH A

I.D. 6145-01-72

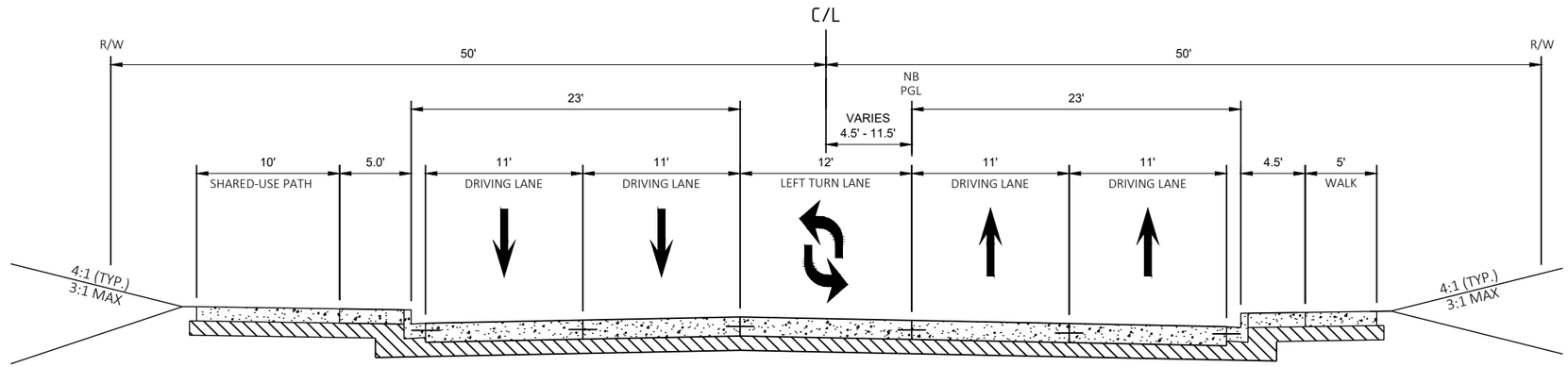

SOUTH SEGMENT - FALL 2026

E ADAMS ST TO PILGRIM DR

I.D. 6145-01-73

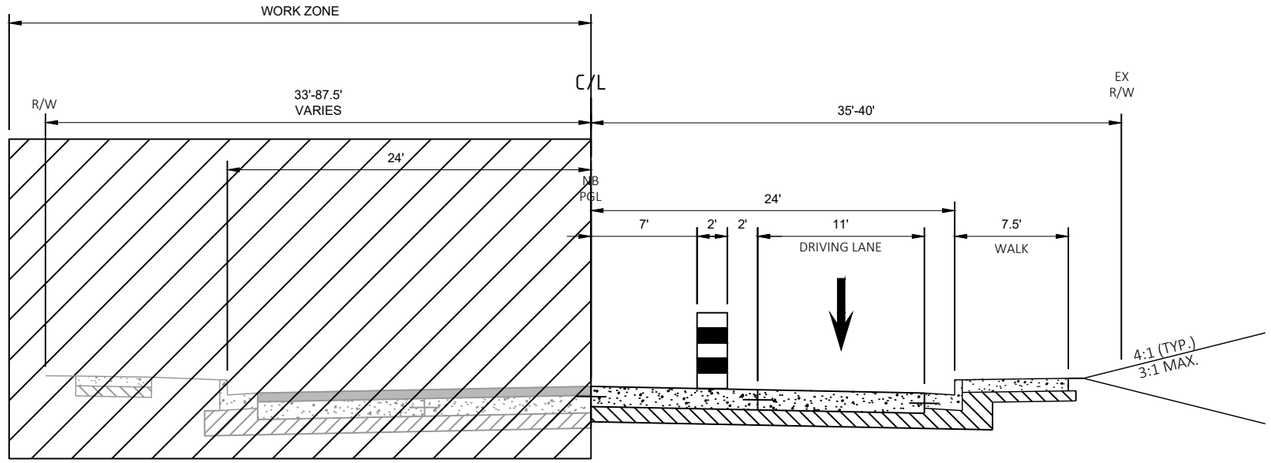

PROJECT NO: 6145-01-72/73/74	HWY: USH 12	COUNTY: SAUK	TRAFFIC CONTROL TYPICAL SECTIONS FALL 2026	SHEET	E

FILE NAME : X:\ML\2021\20210212\DESIGN\TRANSPORTATION\SHEETSPLAN\6145-01-73\025100_TC.DWG
LAYOUT NAME - Fall 2026
PLOT DATE : 6/6/2022 5:31 PM
PLOT BY : DABROWSKI, MATTHEW
PLOT NAME :
PLOT SCALE : 1 IN:10 FT
WISDOT/CADDS SHEET 42

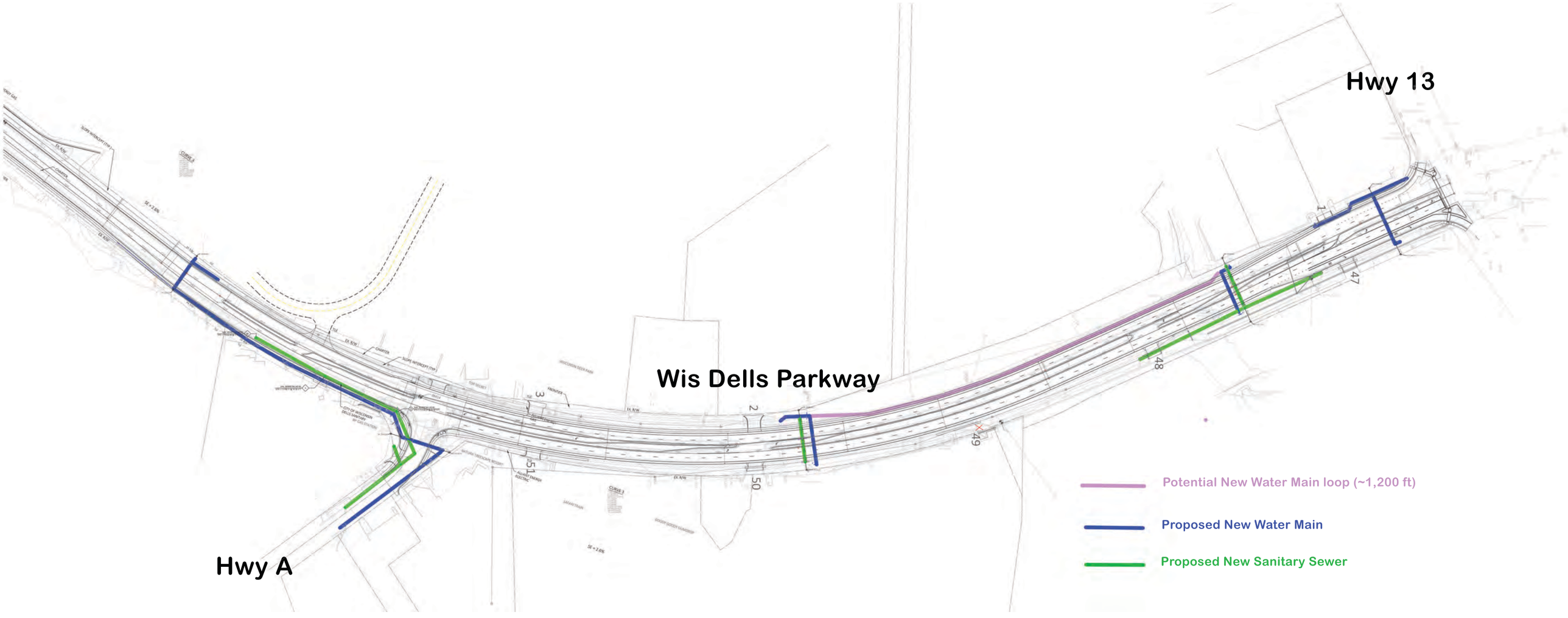
Hwy 13
Wis Dells Parkway
Hwy A
Potential New Water Main loop (~1,200 ft)
Proposed New Water Main
Proposed New Sanitary Sewer

Item 7


Ex Sidewalk
Potential
New Sidewalk
Ex Sidewalk
Ex Sidewalk
0355
0356
10366
0039
0038
0041-11
0025
0026
0024
0024-1
0021
0020
0102
0102-3
0102-1
0102-2
0100
0103
0115
0213
12
13
138

2-1-1 Introduction September 1992

Beginning with Chapter 2 and extending through Chapter 9, Bicycle Facilities, the TEOpS entry heading and numbering system will follow the corresponding system in the MUTCD. The SECTION designation will be numerical instead of alphabetic as in the MUTCD partly in order to differentiate between the two.

2-1-3 Standardization December 2005

Although the Department exercises no control over the usage of non-conforming signs on other systems, except on sections being built under state contracts, the Department can and *should* be looked to for direction in preserving the uniformity of all traffic control devices. Signs are of special concern because they can be designed in almost endless variation.

Part 1 of the MUTCD gives specific positive purposes for the use of standardized traffic control devices. If these were closely followed by all agencies there would be no need for further discussion. Unfortunately, there are some who believe that non-uniform signs are more effective, generally because of their uniqueness. The following discussion is intended to counter this attitude and service as a resource in replying on the subject of uniformity or objecting to the use of non-conforming signs.

While it *should* be quite clear as to the purposes of signing for the benefit of the motoring public, there are other purposes for signing which *may* be installed on streets and highways, some of which have no benefit to motorists at all. These side purposes *may* include efforts to:

- Attract
- Notify, inform
- Advertise
- Educate
- Influence
- Propagandize
- Memorialize
- Placate
- Landmark
- Reinforce

The consequences of displaying non-conforming signs would be expected to mainly affect the motorist, but sometimes *may* affect others, such as pedestrians. These consequences *may* include:

- Misinterpretation
- Incorrect message
- Message contrary to law
- Distracting from driving task
- Distracting from important signs
- Incomprehensive message
- Generation of humor rather than seriousness
- False trust by others (pedestrians)
- Wasted money
- Bad precedent
- Loss of respect
- Poor materials (deterioration)
- Poor aesthetics
- Liability

EXAMPLES

Some specific examples follow which are intended to explain why the usage is undesirable.

Slow Children

The use of this sign is probably the most common non-standard to be found on local streets. It is typically a black on yellow rectangular sign, with a running child figure. A variation *may* add the phrase “at play.” It is often shown in sign catalogs.

The purpose of this sign is largely to placate the residents. While their concern for the safety of their children is understandable, the real issue is not being addressed, which the hazard is caused by children either playing in the street or entering the street without exercising care. Both actions are illegal. The sign therefore tends to endorse illegal actions, and that is why it *should* not be used.

Motorist Stop/Yield to Pedestrians

This sign is commonly a red and white rectangle, but could have several variations. It is usually erected at the crosswalk. A variation seen in other states refers to children and is probably used at crossings of neighborhood school routes. The departure from shape, color and message tends to diminish the impact of conforming signing. It *should* be expected that the public is slightly confused as to what is expected at these "special" places. The most serious reason why they *should* not be used would be if the pedestrians themselves observed the signs and reacted differently, thereby not exercising their normal caution. In Wisconsin, pedestrians have the right of way only if they do not cause the motorist to have difficulty in stopping.

Black Spot

This sign is used in foreign countries and perhaps in this country to indicate the scene of one or more fatal accidents. It is intended to warn motorists of a perceived dangerous location as well as to memorialize the location. In Wisconsin crosses have been erected by private persons to do the same thing. The negative aspects of this activity are the possibility that motorists will be distracted, that the location is only randomly the scene of a fatality, that the sign itself *may* be an obstruction to sight or otherwise an obstacle; that the sign is not informative as to what the hazard might be if there was one; and the prospect that the memorial will be unpleasant to local people if the victim was local.

Directional Signs to Generators

In a recent contract funded with federal aid, provisions were made to install directional signs on a downtown street. The design of the signs was non-conforming regarding the MUTCD Sections 1A.02 and 2D.02 through 2D.08. The signs had two-color backgrounds, had arrows set in circles, which were black and white and raised above the sign surface and extended out beyond the edge of the sign, and had letter fonts and sized which would have made the signs illegible to the motoring public. The signs were removed from the project.

This was admittedly an extreme case of non-conformance. However, it is our obligation to advise that there are definite standards on all features of guide signs. To the extent that signs depart from any of these standards, the motoring public is not served, but rather some other interest is being addressed, some of which are listed above, along with the consequences.

2-1-7 Dynamic Speed Display Signs January 2018

PURPOSE

The MUTCD section 2A.07 allows usage of Dynamic Speed Display Signs to measure and display individual speeds at a specific location. These signs are commonly referred to as "speed display signs," "driver feedback signs" or "your speed is" signs. The signs are activated by radar to detect and display individual vehicle speeds to the vehicle driver. The expectation is that the driver will compare his speed with the legal posted speed and adjust accordingly. These sign installations may be portable installations that are installed on a temporary basis or may be permanent installations attached to new or existing signing. Local units of government have requested to install this signing. This policy provides guidance on the usage of these signs on state maintained roadways.

DEFINITIONS

Freeways are defined as divided highways with fully controlled access at interchanges only. Interstate Highways are freeways with the interstate route designation.

Expressways are defined as divided highways with partially controlled access by a combination of interchanges, at-grade intersections and driveways.

Conventional Highways are defined as streets or roads other than freeways or expressways. They may be divided or undivided, two-lane or multi-lane, and access is available at intersections and driveways.

POLICY

Requests to install and maintain dynamic speed display signs on DOT-maintained roadways **shall** be made in writing by a local unit of government. Each request **shall** include a map showing the proposed location of the dynamic speed display sign(s). Upon Region review, approval or denial **shall** be made by a letter to the local

unit of government. If approval is granted, the letter **shall** confirm that all provisions of this policy are met by the request. If approval is given, the Region *should* also provide a copy of the R2-1C standard sign plate with the approval letter so consistency is maintained in the design and manufacture of the signs.

QUALIFYING CRITERIA

The following criteria **shall** be used by the Region to determine whether a roadway would qualify for dynamic speed display signs.

1. Dynamic Speed Display Signs *may* be allowed in the following locations on the state highway system:
    a. School Speed Limit Zones
    b. Reductions in Speed Zones within a community
    c. Work Zone speed limit areas.
2. Portably mounted dynamic speed display signs *may* be permitted at locations where they can safely be deployed for a time not to exceed eight days.
3. Dynamic speed display signs for work zones *may* be allowed for the duration of the project. The decision to utilize dynamic speed display signs for construction work zones is determined through the work zone transportation management plan process.
4. Except for work zone areas, dynamic speed display signs **shall not** be allowed on freeways and expressways, including ramps.
5. The usage of dynamic speed display signs is limited to one sign per approach of speed transition zones such as at city limits, school zones or speed reduction transition. Transition points from expressways to conventional highways may be permitted.
6. Dynamic Speed Display sign installations **shall** comply with all NCHRP 350 crashworthy requirements.
7. When permanent mounted dynamic speed display signs are used, they **shall** be placed next to or downstream (typically 100'-200') of the regulatory speed limit sign (R2-1) or school speed assembly sign (S4-51) sign. The signs **shall** be at the same mounting height.
8. Dynamic speed display signs that do not conform to this policy **shall** be removed. Notification to communities **shall** be made by written letter. If existing non-permitted signs are not removed, WisDOT will remove the sign(s) at the owner's expense.
9. The local unit of government **shall** be responsible for manufacture, liability, installation and maintenance costs.
10. The local unit of government **shall** affix an identification label to the back of each sign, per Wisconsin State Statute 86.19(5).
11. WisDOT reserves the right to remove or move dynamic speed display signs in the event of a speed zone change, maintenance work or improvement project. WisDOT will notify the local unit of government, in writing, of the work and all costs associated with moving or removing the dynamic message speed signs. All costs for such moves **shall** be paid by the local unit of government.
12. The size lettering used on dynamic speed display signs **shall**, at a minimum, match the adjacent speed limit sign (see R2-1C sign plate).

USAGE CRITERIA

1. Dynamic speed display signs installed in permanent speed zones *should* operate 24 hours a day, 7 days a week.
2. Dynamic speed display signs installed on a temporary speed zone *should* operate for the time that the speed zone is in effect (e.g. school zones or work zones).
3. For work zones, the dynamic speed display signs *should not* be overused. Only one dynamic speed display sign *should* be used per direction of traffic flow.

SIGN DESIGN CRITERIA

1. The R2-1C sign (See Figure 1) **shall** be used for permanent applications.
2. The changeable portion of the dynamic speed display sign **shall** have a black background with an amber (yellow) legend. On devices equipped with flip discs, the legend color *may* be yellow or green.

Only one sign, in each direction of a two-way street approach or back-to-back signs, will be allowed for each crosswalk approach.

3. The changeable message portion of the sign **shall** display the speed of the approaching vehicle as “XX” in miles per hour. The following standards apply to the changeable message portion of the sign:
    a. The sign **shall** flash at drivers traveling over the posted speed limit.
    b. The flash rate *should* be between 50 and 60 cycles per minute.
    c. Threshold speed setting *should* be set at 20mp below and above the posted speed.
    d. For speeds measured over the speed threshold setting, the dynamic speed display sign **shall** go blank.
    e. The dynamic speed display sign **shall** be either blank or display zeros when no vehicles are present.

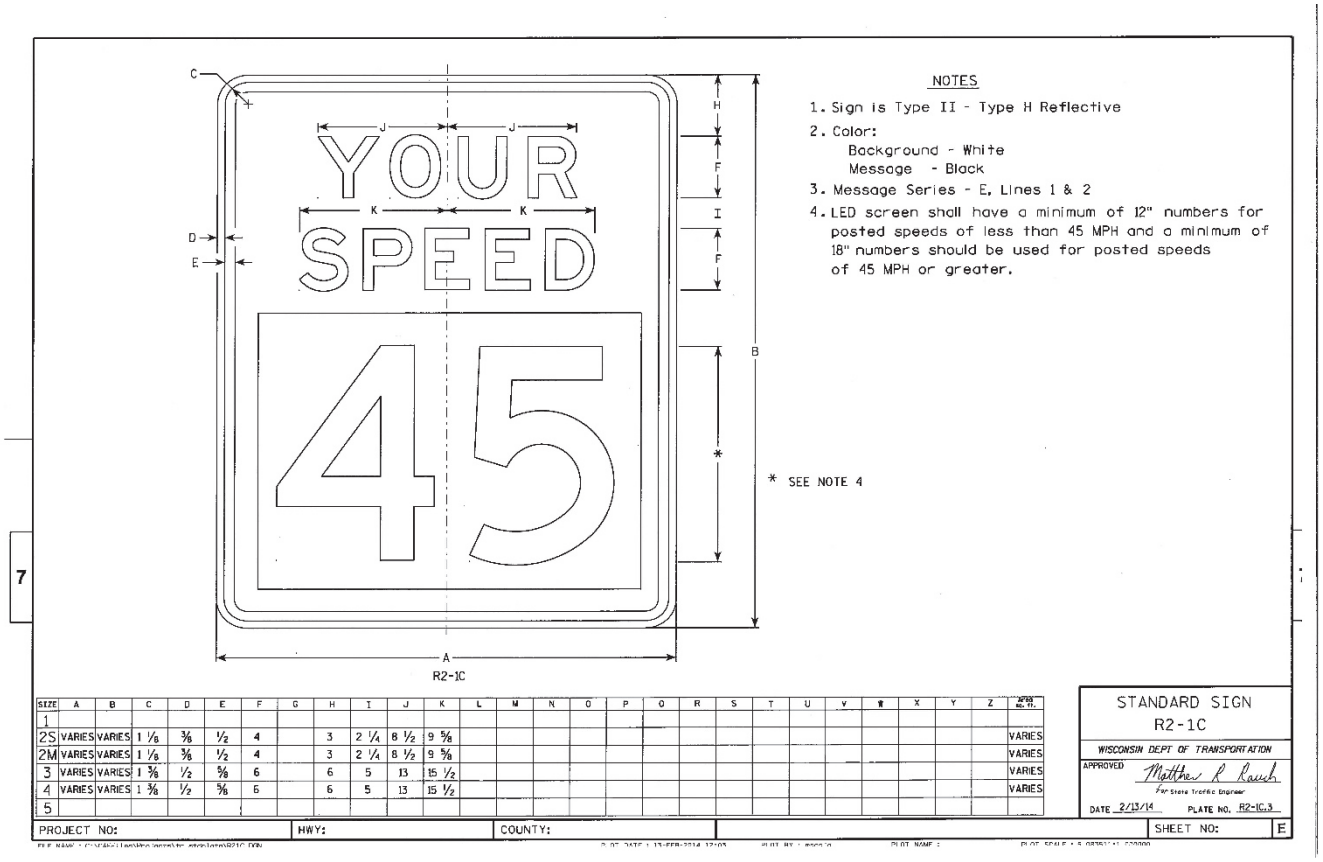

Figure 1. Dynamic Speed Display Sign R2-1C

2-1-8 LEDs (Blinker Signs) July 2018

PURPOSE

The MUTCD section 2A.07 provides standards and options for the usage of Light Emitting Diode (LED) units within the face of a sign and in the border of a sign to improve conspicuity and increase the legibility of sign legends and borders. This policy provides requirements and guidance on the proper use of the LED (commonly referred to as blinker) signs on state-maintained highways. Per the MUTCD, these blinker signs *may* be used on STOP signs, Warning signs and other regulatory signs such as speed limit sign or school signs. This policy provides guidance and requirements for usage on state-maintained highways. Refer to TEOpS 4-5-1 for warning sign flasher enhancement device options for pedestrians.